SINGLE DRAWER SPEC SHEET

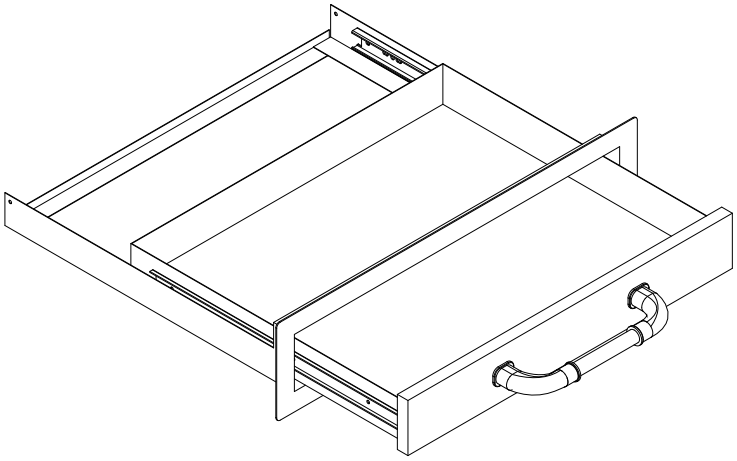

ISOMETRIC VIEW

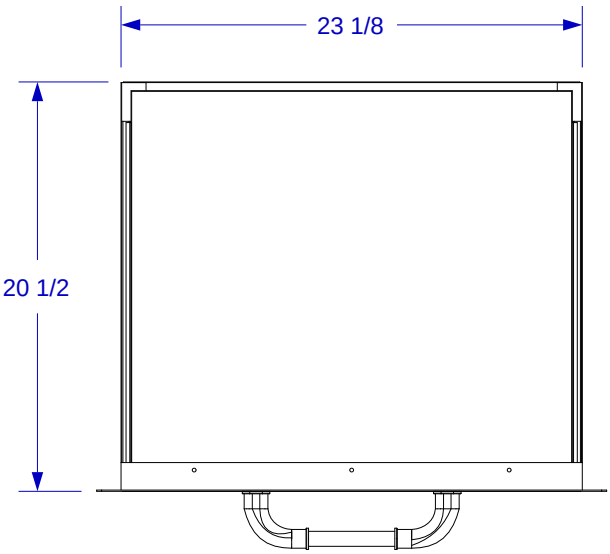

TOP VIEW

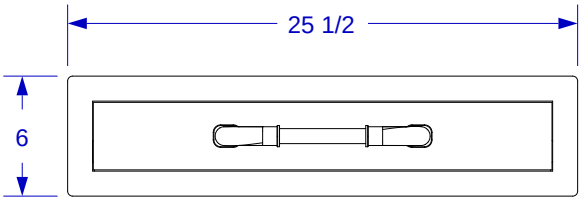

FRONT VIEW

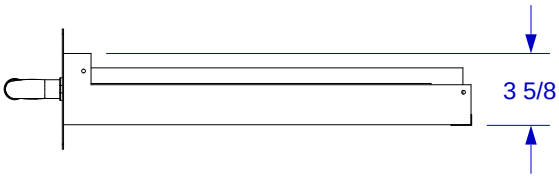

RIGHT SIDE VIEW

NOTES:
1. CUTOUT DIMENSIONS: 23 1/4" X 4" X 20 1/2"
2. SCALE: 1 1/4" = 1'-0"
3. REVISION: 10/2009