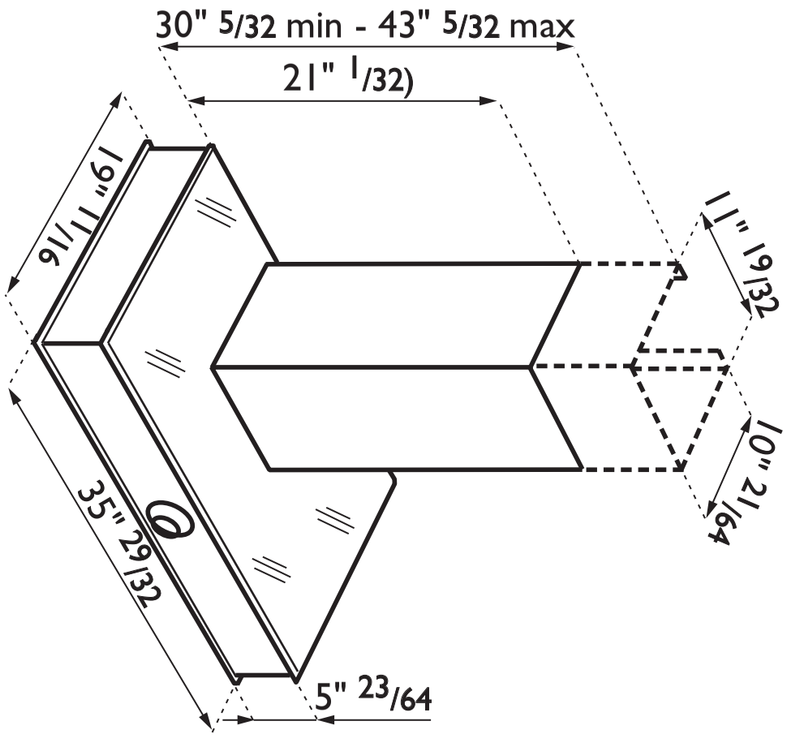
30" 5/32 min - 43" 5/32 max
21" 1/32)
19" 11/16
11" 19/32
10" 21/64
35" 29/32
5" 23/64

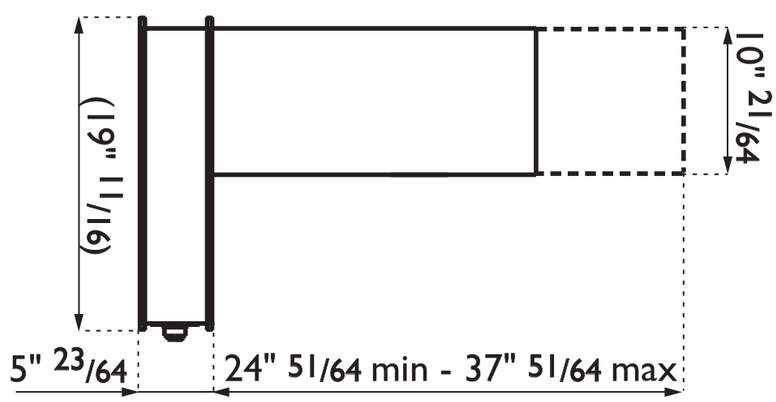
(19" 11/16)
10" 21/64
5" 23/64
24" 51/64 min - 37" 51/64 max