BLAZE™

OUTDOOR KITCHEN + GRILLS

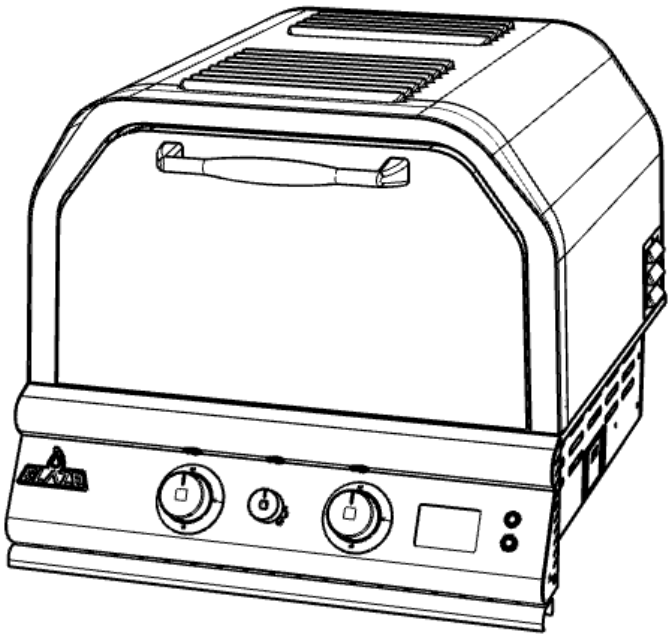

PREMIUM LTE SERIES PRODUCT MANUAL

Blaze LTE+ Oven

BLZ-LTE3OVN-LP/NG

SCAN TO REGISTER

BlazeGrills.com

Table of Contents:

Unpacking Your Unit	2
Blaze Introduction / Records	3
General Safety and Installation Warnings	4–5
Specifications	6
Exploded View and Replacement	7
Clearance to Combustibles	8–9
Saftey Instructions	10–11
Electrical Safety	12
Gas Safety and Installation Warnings	13
Rating Plate Location	13
Propane Connections	14
Natural Gas Connections	15
Fuel Conversions	16
Local Codes	17
Checking for Leaks	17
Installing the Appliance	18
Ventilation	19
First-Time Operation	20–21
How to	22
Cooking Techniques	23
Meat Probe	25-27
Warranty	28

Unpacking Unit:

Your Blaze Series ppliance comes preassembled and requires very little setup. We do recommend the use of professional help during the installation of your unit as improper installation may affect your warranty.

Product Inspection: A final inspection of your product occurs at the factory to ensure a quality product is packaged. Please re-check for possible shipping damage immediately after unpacking your appliance. If the appliance is found to have some damage, contact your dealer immediately as often the shipping carrier will have a time frame to report damage. Remove all packaging materials, labels and protective plastic film before you start cooking, and please save the packaging material if there is shipping damage. Keep all packaging and document condition of appliance upon arrival.

Caution: Do not leave the unit under the sun with the protective film as it will make the film difficult to remove and/or leave markings on the materials which are not covered by the warranty. Never place your fingers inside the observation openings in the appliance grate during removal or replacement of the appliance grate and never place your fingers inside the observation openings in the appliance at any time as injury could occur.

Burners: Check the burner tubes and remove any obstructions that may be in the ports or holes. Using cold water and a brush will be sufficient. Make sure all foreign particles are removed from the burner before use. Make sure the air shutter on the burners is slightly opened (to about 1/8" for NG and 1/4" for LP). When finished, ensure that the burners are aligned with the valve orifice and seated in the bracket slot. This is accomplished by first placing the burner tube shutter hole securely over the valve orifice and ensuring the male post on the appliance chassis rests in the corresponding slot in the rear of the burner. Failure to do so could result in a fire and injury.

A Special Message to Our Customers:

Congratulations on your purchase of a Blaze product! At Blaze, we pride ourselves on creating high-quality, durable, and innovative outdoor cooking solutions that inspire memorable experiences and exceed expectations. Our passion for craftsmanship, performance, and outdoor living drives everything we do.

This manual provides easy-to-follow instructions for installing, operating, and maintaining your Blaze appliance. We recommend reading this manual carefully before your first use to ensure safety, proper care, and optimal performance. Your appliance is designed and built with meticulous attention to detail, using premium materials and cutting-edge manufacturing processes, so you can enjoy years of reliable, efficient, and satisfying outdoor cooking.

We are committed to providing exceptional products and unparalleled customer service. Your satisfaction is our top priority, and we stand behind the quality and workmanship of every Blaze product.

Thank you for choosing Blaze and welcome to our family of passionate outdoor enthusiasts. We look forward to being a part of your outdoor cooking adventures and helping you create cherished memories with family and friends.

Sincerely,

Blaze

Conforms to ANSI Z21.58-2022/CSA 1.6-2022 Outdoor Cooking

LIFETIME WARRANTY

ONE YEAR 1 WARRANTY

Lifetime limited warranty. For complete warranty information, product must be registered to validate the warranty. Terms apply. See pg. 26 for all details.

Please Retain for Your Records:

For your convenience, please record the following information, which can be found on the data name plate located on the left side panel of the appliance, a second label with the model number and serial number is located under the right side of the drip tray and the third is located on the box. Please refer to this information when contacting Blaze or an authorized service agent.

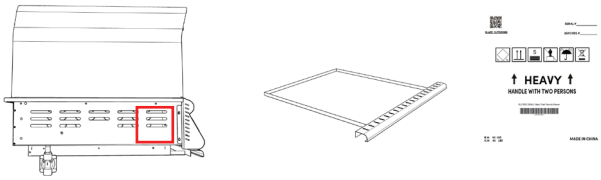

MODEL #:

_____

SERIAL #:

_____

DATE OF PURCHASE:

_____

PLACE OF PURCHASE:

_____

TYPE OF GAS: NG ____ LP ____

To the Installer:

Please read these instructions carefully before installation and give this manual to the owner.

To the Owner:

Keep this manual in a safe place for future reference

C US

USA EDITION

General Safety and Installation Warnings

WARNING

READ INSTRUCTIONS: Please read this manual carefully and before using your BLAZE Appliance to ensure proper operation, installation, servicing and to reduce the risk of fire, burn hazard and/or other injury. Improper installation and service or maintenance may cause property damage, injury, or death. Keep this manual handy and do not operate without reading this manual.

IF YOU SMELL GAS: 1. Shut off gas to the appliance. 2. Extinguish any open flame. 3. If odor continues, immediately call your gas supplier or your fire department.

EXPLOSION HAZARD: Do not store or use gasoline or other flammable liquids or vapor in the vicinity of this appliance. An LP cylinder not connected for use shall not be stored in the vicinity of this or any other appliances. Do not attempt to heat unopened containers on the appliance as pressure may build up and cause the container to explode. Never use charcoal or any other solid fuel in the appliance.

ONLY USE A QUALIFIED PROFESSIONAL INSTALLER: Only a qualified professional installer and service technician must perform adjustments and service of the appliance. Proper location and proper use are essential to insure safe and continued trouble-free operation. Any non-approved alterations made to the appliance will void the product's warranty.

HOT SURFACE: Do not touch while hot or exposed to heated surface.

APPLIANCE INSTALLATION: This gas appliance must be installed in accordance with all local codes. In areas with no local codes, the gas appliance must be installed in accord with the National Fuel Gas Code ANSI Z223.1 and storage and handling of petroleum gases, ANSI/NFPA 58 or CSA B149.1 natural gas and propane installation.

IN MASSACHUSETTS: All gas products must be installed using a "Massachusetts" licensed plumber or gasfitter. A "T" handle type manual gas valve must be installed in the gas supply line to this appliance. This applies to permanently installed natural gas and propane installations but not for 20-pound propane tanks.

HANDLE WITH CARE: Use heat-resistant gloves or tools to move it. Edges can be sharp. Failure to use caution could result in injury or cuts.

THIS UNIT IS FOR OUTDOOR USE ONLY: Do not operate in a building, garage, or any other enclosed areas. This could result in carbon monoxide buildup which could result in injury or death. Appliances are not designed or intended for installation near a window or vent that goes into the house.

FIRE HAZARD: Have an ABC Fire Extinguisher accessible at all times. Never attempt to extinguish a grease fire with water or other liquids. Never cook without the drip pan in place. Never operate this appliance while under the influence of alcohol or drugs.

CALIFORNIA PROPOSITION 65 WARNING: This product can expose you to chemicals including chromium (hexavalent compound), which is [are] known to the State of California to cause cancer [and] [or] [birth defects or other reproductive harm. For more information go to www.p65warnings.ca.gov

NOTE: The manufacturer cannot be held responsible for damage or injury caused by improper use of this appliance.

BURNER TUBES MUST BE INSPECTED AND CLEANED BEFORE EACH USE: Spiders and small insects occasionally make nests in the burner tubes. These nests can lead to a gas flow obstruction, which could result in a fire around the burner tubes. This type of fire is known as “flashback” and can cause serious damage to your appliance and create an unsafe condition for the user. Frequent inspection and cleaning of the burner tubes for any obstruction is necessary.

Flashbacks, also known as flash fires or flare-ups, can occur in appliances when fats and juices from food drip onto the hot burners or coals, causing a sudden burst of flames. It's important to understand and heed warnings related to flashbacks to ensure safe cooking. Flashback exhibits a characteristic “whooshing jet like” sound. If this should occur, immediately turn off your burners. Once cool to the touch remove and clean them with soap, water and a brush until all foreign objects are removed. Once completely dry, re-install.

BURNERS MUST BE ALIGNED: Blaze products ship to you with pins/screws locking our burners in place. For proper operation, burners must be aligned with the valve orifice and seated in the bracket slot. This is accomplished by first placing the burner tube shutter hole securely over the valve orifice and ensuring the male post on the appliance chassis rests in the opening in the rear of the burner. Failure to do so could result in injury or death.

Step 1:

Remove cooking Grates and stone.

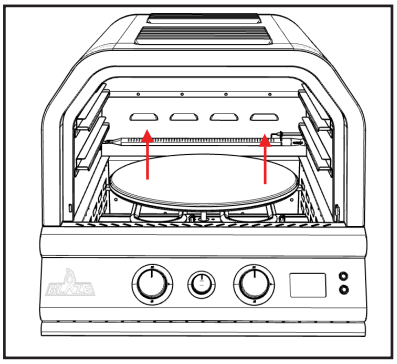

Step 2:

Remove screws from center peg.

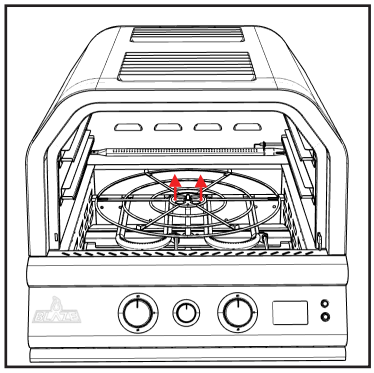

Step 2:

Remove two screws from each burner.

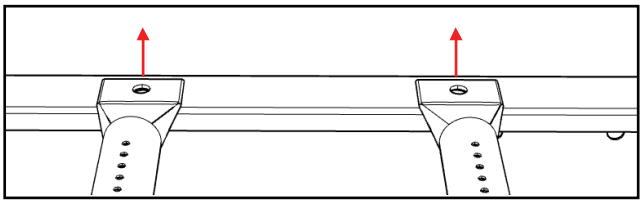

Step 4:

Visually inspect burners.

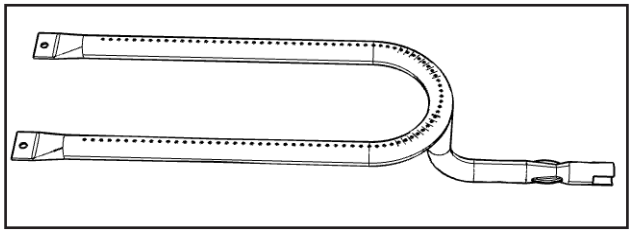

Specifications:

Total BTU	24,500 BTU
Primary ignition	Push N' Turn FlameThrower
Secondary ignition	NA
Cooking surface	20 1/2 X 16 4/5"
Total cooking area	688 sq.in
Flame tamer	Ceramic stone
Zone cooking	1 zones
Burner type	Tube Burner
Rotisserie	Yes
Gas type	See rating place for size and gas type. See pg 16 for conversion instructions

For outdoor use only: The manufacturer cannot be held responsible for damage or injury caused by improper use. Safe operation of the BLAZE Appliance depends upon its proper installation. Only a qualified professional installer and service technician must perform adjustments and service of the appliance. Proper location and proper use is essential to ensure safe and continued trouble-free operation. Any non-approved alterations made to the appliance will void the product's warranty.

Dimensions:

Product dimensions	26" W x 29 3/16" D x 23 1/4" H
Cutout dimensions:	24 1/2" W x 24 5/16" D x 8 9/16" H
Overall width of cavity	24 1/2"
Overall depth of cavity	24 5/16"
Overall height of cavity	8 9/16"
Clearance to overhead non-combustible construction	72" with vent hood
Clearance to combustible construction	18''
Clearance to non-combustible construction	4''
Overall height when open	23 1/4"

Note: Outdoor cooking appliances require an AIR GAP underneath, which allows for proper air flow and combustion.

WHEN INSTALLING YOUR APPLIANCE BE SURE THAT AFTER THE CAVITY IS CUT THERE IS A 1'' AIRGAP CUT OUT OF THE FRONT FACE OF THE COUNTERTOP BELOW THE CONTROL PANEL TO ALLOW AIR FLOW.

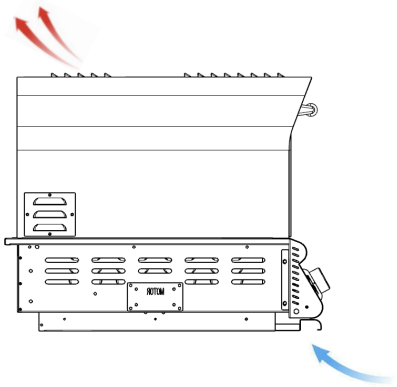

Exploded View and Replacement Parts

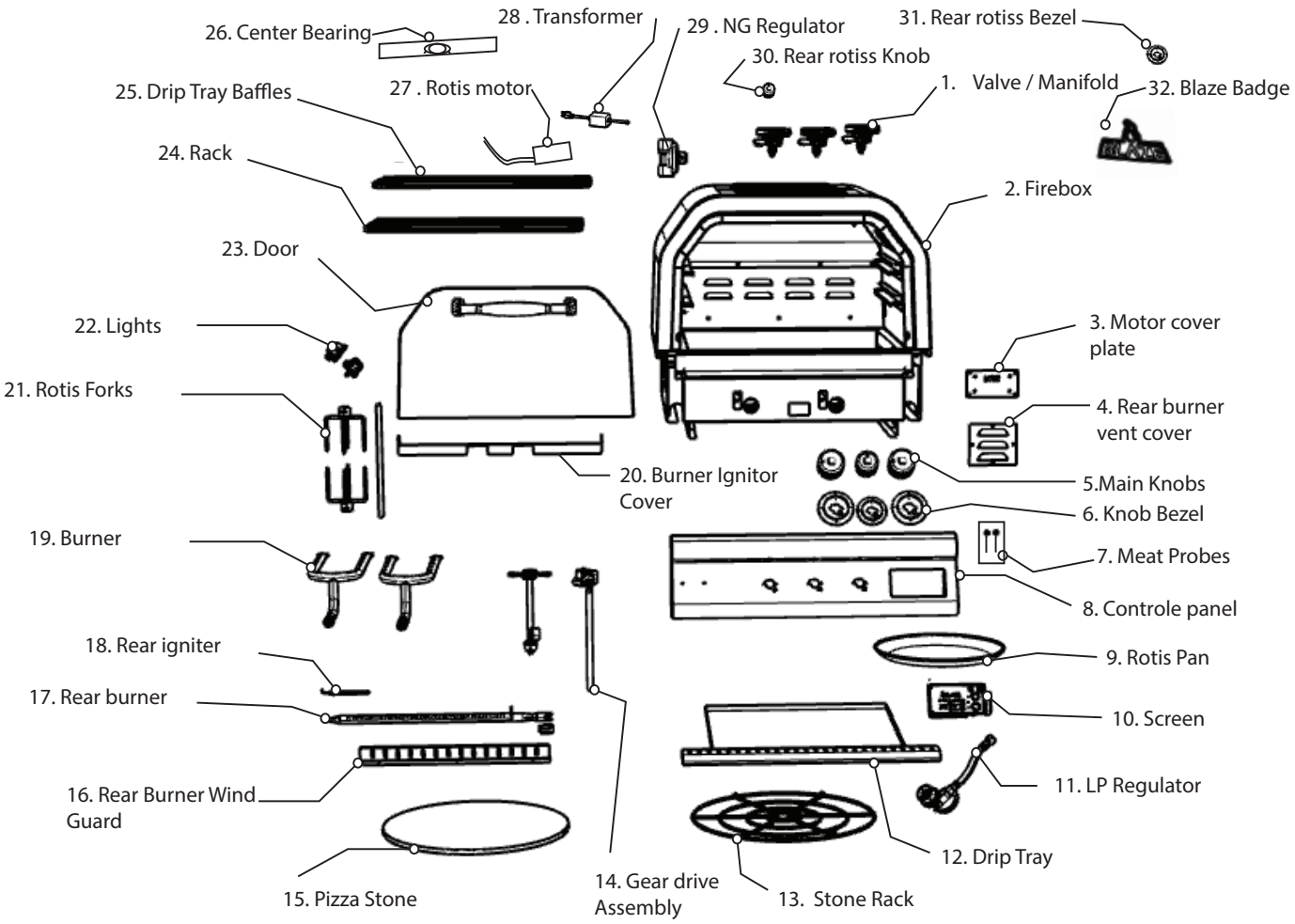

Blaze Part Number: Reference Guide									
1.	BLZ-26PZOVN-012	10.	BLZ-LTE3OVN-004	19.	BLZ-26PZOVN-015	28.	BLZ-26PZOVN-009		
2.	NA	11.	BLZ-LP-HOSE/REG	20.	BLZ-26PZOVN-024	29.	BLZ-32-050		
3.	NA	12.	BLZ-26PZOVN-011	21.	BLZ-26PZOVN-004	30.	BLZ-LTE3OVN-002		
4.	NA	13.	BLZ-LTE3OVN-005	22.	BLZ-26PZOVN-021	31.	BLZ-LTE3OVN-002		
5.	BLZ-LTEOVN-002	14.	BLZ-26PZOVN-003	23.	BLZ-26PZOVN-011	32.	BLZ-GRIDDLELTE-007		
6.	BLZ-LTE3-003	15.	BLZ-26PZOVN-002	24.	BLZ-26PZOVN-019				
7.	LTE3OVN-006	16.	BLZ-26PZOVN-023	25.	BLZ-26PZOVN-025				
8.	BLZ-26PZOVN-011	17.	BLZ-26PZOVN-016	26.	BLZ-26PZOVN-018				
9.	BLA-26PZOVN-005	18.	BLZ-26PZOVN-022	27.	BLZ-26PZOVN-007				

Cavity Cutout Size

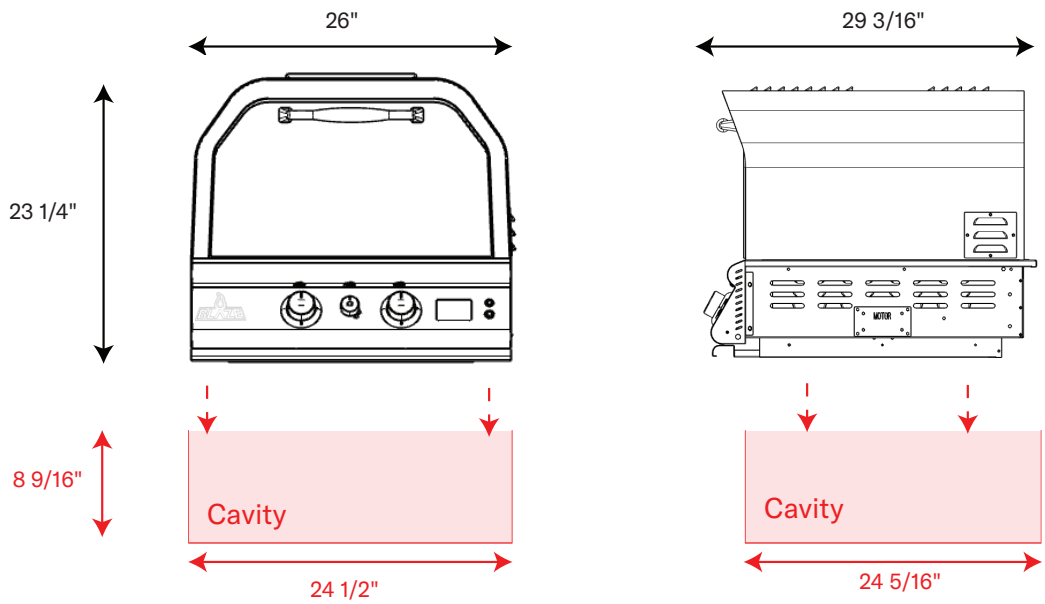

If the countertop of your outdoor kitchen extends beyond the edge of the island, it will be necessary to make notches on the front edges of the countertop to allow the appliance to fit perfectly against the front edge of the countertop. The usual size of the chamfer is 3/4" by 3/4", but Blaze recommends placing the product in the cutout and marking the notch according to the desired width and depth for a precise fit due to varying personal preferences.

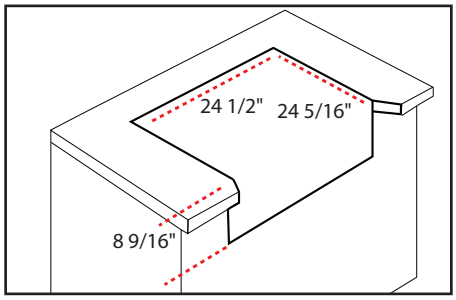

Distance to Rear Combustibles

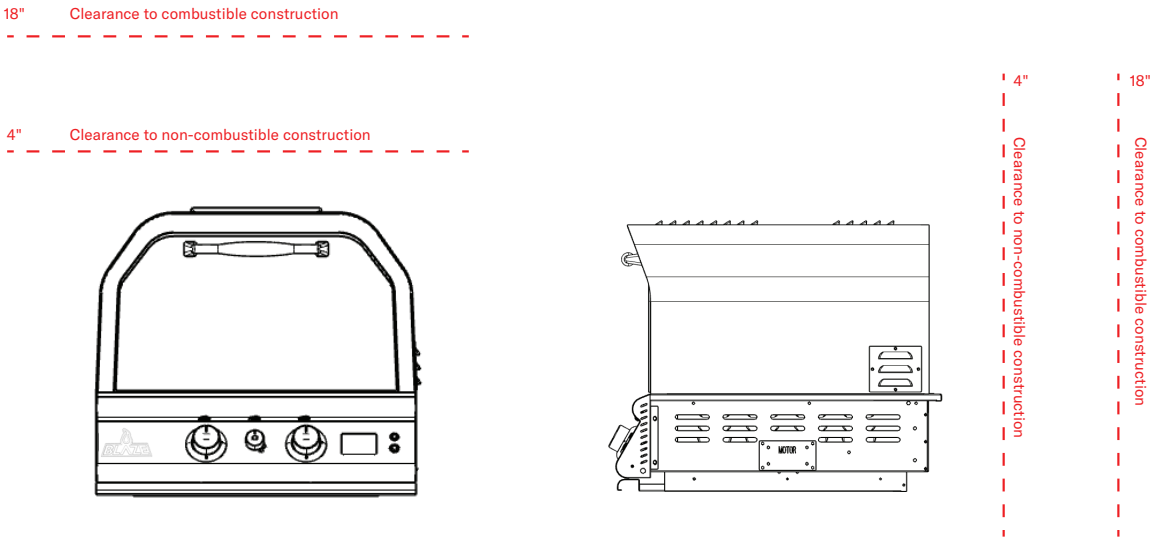

Distance to Overhead

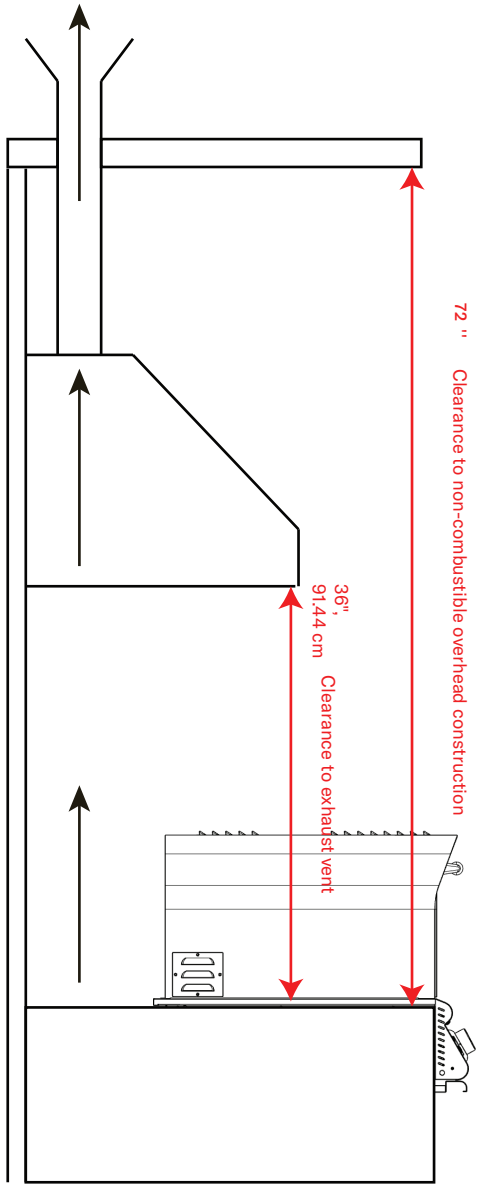

18 " clearance to combustibles

This outdoor cooking gas appliance must not be installed under overhead combustible construction.

When installing a Blaze Appliance under an Non-Combustible overhead construction:

When installed under non-combustibles, the area above the Blaze appliance must be covered with a UL-approved vent hood. The vent hood must provide protection for the overhead construction. The bottom of the exhaust fan should be placed 36'' above the cooking surface.

It is imperative that a Blaze appliance is not installed under combustible overhead construction.

When installed under overhead non-combustible construction, a vent hood is still recommended. Gas appliances produce a large amount of smoke. The covered area should be properly ventilated.

When using a vent hood, the area above the cooking surface of the oven must be covered with a vent hood larger than the cooking area of the oven, and with a minimum of 1000 CFM for proper outdoor application.

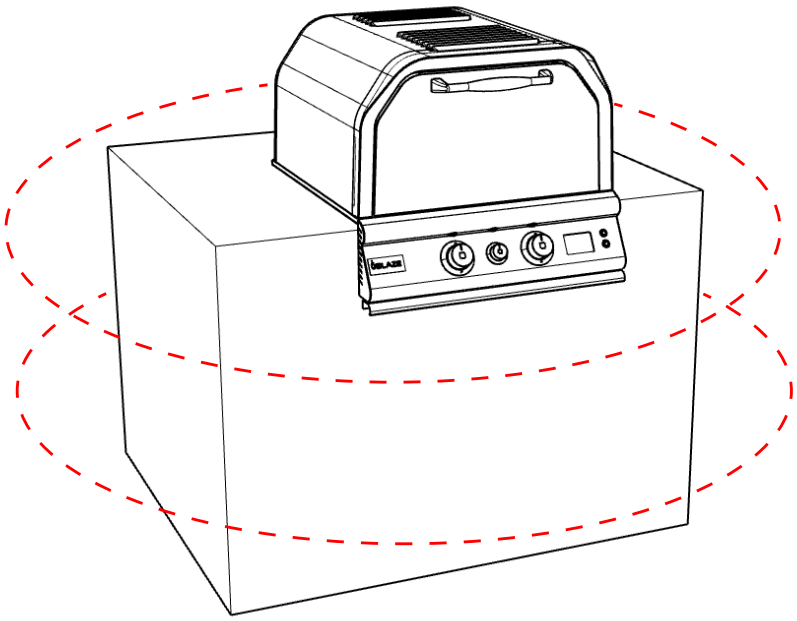

Important Safety Instructions

- All gas appliances will get hot during use. Use extreme caution when operating the appliance.
- Do not touch hot surfaces. Always use the handle to open or close the appliance.
- Close supervision is necessary when this or any appliance is used near children. Keep children away from the appliance during operation and until the appliance has cooled off.
- Do not store any LP (liquid propane cylinder or unconnected tank in the area of this appliance or any other appliance. Never store an LP cylinder or tank indoors, or within the reach of children.
- Never test the appliance for gas leaks using a lighted match or any other open flame; flame. See leak testing procedures on pg. 17
- The use of accessories, regulators, or components not recommended by the appliance manufacturer may cause injuries and will void warranty.
- Never light the appliance when closed. Be certain that the burners are positioned and seated over the gas valves and on the burner support.
- Never lean over the cooking surface when lighting or operating the appliance.
- Use cooking utensils with wood handles and insulated oven mitts when operating the appliance.
- Do not store anything in the appliance. Make sure food is not forgotten in the appliance; forgotten items could melt or catch fire when the appliance is turned on.
- To prevent injuries, do not use accessories that are not recommended by the manufacturer.
- Before cleaning the appliance, disconnect power cord.
- **Never use the appliance in windy conditions. If located in a consistently windy area (oceanfront, mountaintop, etc.) a wind break will be required. Winds blowing into or across the upper hood vent or into hood can cause poor performance and/or cause the control panel and knobs to get dangerously hot.**
- Always open the appliance carefully, using only the handle – the hood may be hot.
- Children should not be left alone or unattended in an area where any appliance is in use. They should never be allowed to touch, sit or stand on any part of the appliance.
- Do not store items of interest to children in cabinets above the appliance or in the appliance. Children climbing on the appliance to reach these items could be seriously injured.
- Wear proper clothing when operating this appliance. Loose-fitting or hanging garments should never be worn while using the appliance.
- Do not leave the appliance unattended while in use.
- Do not use water on grease fires! A violent steam explosion may result. Instead, smother the fire with a multi-purpose ABC extinguisher.
- **Location of appliance:** Most importantly, this is an outdoor appliance. Ensure your appliance is positioned safely away from anything that can catch fire. Under no circumstance is this appliance to be used indoors. This includes garages or any other enclosed area.
- This outdoor cooking gas appliance is not approved to be installed in or on any recreational vehicles or boats. Blaze appliances are for single family/residential use only.
- **When determining a suitable location, take into account concerns such as exposure to wind, proximity to traffic paths,** and keeping any gas supply lines as short as possible. Do not store combustible materials, gasoline, or flammable liquids or vapors around the appliance.
- Please note since hot air rises above the Blaze appliance while in operation, covered locations should be avoided. Do not locate the Blaze appliance where an overhang or awning may cover it.
- DO NOT obstruct the flow of combustion and ventilation air to this appliance.

- **Locate outdoors only:** As with any gas appliance, harmful carbon monoxide is produced during the combustion process that should not be allowed to accumulate in a confined space.

- **Non-combustible enclosure:** The Blaze appliance must be installed in a non-combustible enclosure only. The determination of whether a location is combustible or non-combustible construction is made by the local fire marshal, building inspector, or the local safety authority having jurisdiction.

- **Clearance from combustibles:** Ensure your appliance remains at a distance of at least 18'' from sides and 18'' from back from any combustible material such as wood, gyprock, paper and plants. Do not store combustible materials, gasoline, or flammable liquids or vapours around the appliance. The outdoor kitchen structure itself should be constructed completely out of non-combustible materials. BlazeGrills offers an insulating jacket that may be used to increase protection of surrounding construction.

- **Adequate ventilation:** Ensure there is adequate ventilation for both the appliance, appliance cart, and/or island cavity. This is required not only for proper combustion, but also to prevent gas build-up. While the amount of venting required varies on a case-by-case basis, consult with your local licensed professional and local code for adequate venting requirements. Keep the ventilation openings of the enclosure free and clear from any debris.

- Keep any electrical supply cords and fuel supply hoses away from any heated surfaces and/or sharp, aggressive edges.

- **Firm level surface:** Use your appliance only on a firm, level surface. This appliance is not designed for recreational vehicles, and should not be installed on a boat or marine craft.

- **Protection from weather: Keep the appliance protected from adverse weather, including rain and winds. Wind, particularly coming into the rear of the appliance, can affect the exhaust from escaping from the appliance. This can back up the heat behind the control panel potentially creating a gas leak, damage to the product, and injury.**

- **Maintenance access:** When your appliance is installed, you should be able to access the gas supply line including the gas piping or hose, gas regulator, gas cylinder, and any shut-off valves. Allow clear access to the entire gas supply hose and regulator.

- **Partial enclosures:** Many backyards have areas that are partially closed off, such as balconies and pergolas. In some cases, it is hard to decide whether these partially enclosed areas should be classified as indoor areas, particularly in terms of permanent (non-closable) ventilation. Consult the AHJ (Authority Having Jurisdiction) or local contractor of any uncertainty. This outdoor cooking gas appliance shall not be located in an indoor application.

- Outdoor Appliance with Three Walls, No Roof: An appliance is considered to be installed outdoors if it is placed in an area with up to three walls but no roof or overhead cover. The walls must be permanently open, meaning they cannot be closed off by sliding doors, garage doors, windows, or screens.

- Outdoor Appliance with a Roof and Two Walls: An appliance is also considered outdoors if it is installed in a space with a roof and no more than two walls. The walls can be either parallel or meet at a corner, like in a breezeway. All openings in this space must remain permanently open, and sliding doors, garage doors, windows, or screens are not considered as permanent openings.

- Do not use under 0 degrees F.

Electrical Safety and Installation Warnings

Extension cords may be used if care is exercised in their use. If an extension cord is used:

- The marked electrical rating of the cord set or extension cord should be at least as great as the electrical rating of the appliance
- The cord should be arranged so that it will not touch hot surfaces, sharp edges or drape over the countertop or tabletop (where it can be pulled or tripped over unintentionally).
- Outdoor extension cords should be used with products suited for outdoor use. They are surface marked with suffix letters "W" or "W-A" and with a tag stating "Suitable for Use with Outdoor Appliances".
- To protect against electrical shock, the power cord and plug should be kept dry and off of the ground. Do not clean this product with water spray; do not spray cleaners into the lamp socket area.
- Gasoline, lighter fluid, or other flammable liquids and vapors should never be stored in the area of this appliance or any other appliance.
- Before installation or service, disconnect the power supply to the work area by removing the fuse, "tripping" the circuit breaker, or unplugging the unit.
- **NOTE:** Use a 15-AMP Breaker with GFI protection.
- Do not operate any appliance with a damaged power cord or power plug, and do not operate any appliance after the appliance malfunctions or has been damaged in any manner. If this should occur, return the appliance to the nearest authorized service facility for examination, repair, or adjustment.
- This appliance conforms to all uniform electrical safety codes and electrical grounding regulations. Install unit according to I.A.W. local codes or with National Electrical Code ANSI/NFPA 70 or CSA C22.1 in their absence.
- This appliance uses a “Transformer” to provide power to the LED lights and internal lights. This diagram shows the connection to the transformer.

Before installing appliance into cart or built-in. Firmly plug in the two-pronged LED wire into the transformer and tighten the threaded wire nut.

Remember to mount your 15-amp outlet using the 4 holes on the inside of the appliance cart. If you are using a built-in, mount the outlet to the back wall of the built-in housing.

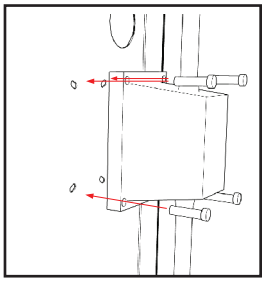

15-AMP OUTLET **BLAZE APPLIANCE**

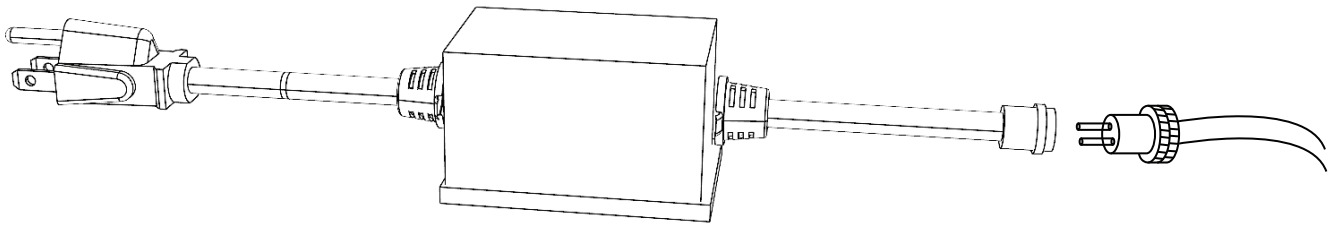

Gas Safety and Installation Warnings

WARNING

ALWAYS CHECK FOR LEAKS AFTER CHANGING THE LP CYLINDER. Finding and/or fixing a gas leak is NOT a "DO-IT YOURSELF" procedure – ONLY USE A PROFESSIONAL.

NEVER USE THE APPLIANCE WITHOUT FIRST LEAK TESTING THE GAS CONNECTIONS INCLUDING ALL OF THE VALVES, FITTINGS, LINES, ETC.

WARNING: DO NOT USE OPEN FLAME TO CHECK FOR LEAKS. USE OF AN OPEN FLAME COULD RESULT IN A FIRE, EXPLOSION, AND BODILY HARM.

WARNING: DO NOT SMOKE WHILE PERFORMING THE LEAK TEST. Any open flame will ignite the gas.

To prevent fire or explosion hazard, perform leak test outdoors only.

Check to ensure that flexible hoses do not have any cuts and wear that may affect the safety before each use. Only the factory supplied hose and regulator must be used. Use only replacement regulator and hose assemblies specified by Blaze.

WARNING: DO NOT USE A DENTED, EXPIRED, OR RUSTED LP CYLINDER.

Gas Safety:

All gas connections should be made by a professional qualified technician and in accordance with local codes and ordinances. The installation must conform with local codes or, in the absence of local codes, with either the national Fuel Gas Code, ANSI Z223.1/NFPA 54, or CAN/CGA-B149.1, Natural Gas Installation Code or CAN/CGA-B149.2, propane Installation Code.

- **Gas specifications:** Be sure that the gas supplied to the appliance conforms to the model you purchased. A natural gas appliance requires natural gas to operate; an LP appliance requires liquid propane gas to operate. Check the rating label on the left hand outside of the unit.

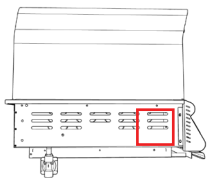

RATING PLATE LOCATION

- Do not twist the gas supply hose.
- Never connect the appliance to an unregulated gas supply line. Appliances operated without a regulator are unsafe and will not be serviced until installed properly and safely. Unsafe operation without a gas regulator will void the warranty of the appliance.
- Appliances operated with (natural gas) NG must be installed with the NG regulator supplied with the unit and set to 4" water column pressure.
- Appliances operated with (liquid propane) LP gas must be installed with an LP regulator set to 11" water column pressure.
- NEVER CONNECT THE APPLIANCE TO AN UNREGULATED GAS SUPPLY.

Gas Connections

Procedure for LP Cylinder Connection (20 lbs.):

All purging and refilling of LP cylinders must be performed by qualified personnel in the LP gas industry.

Transporting and Storing LP Cylinders:

Transport only 1 cylinder at a time, ensuring the cylinder is secured in an upright position with the control valve turned off and the dust cap in place. Store cylinders upright, outdoors — not in a building, garage, or any other enclosed area — and out of the reach of children.

Connecting LP Cylinders:

Step 1: Slide the Blaze appliance halfway into the cart or built-in then Install the factory-supplied hose and regulator assembly as shown. Connect the 3/8" flare end of the hose to the griddle coupling using a 3/8" open wrench. Do not apply pipe sealant to the 3/8" flare connection.

Step 2: Connect the regulator to the LP cylinder. Hand tighten it, do not use a wrench. Check for leaks using soapy water solution (see pg. 17).

Replacing LP Cylinder:

Step 1: To disconnect, turn the burner knobs to the OFF position.

Step 2: Close the cylinder valve by turning the hand wheel counterclockwise until it stops.

Step 3: Disconnect the regulator from the LP cylinder.

Step 4: Replace LP cylinder and connect regulator hose. Check for leaks.

Note: An enclosure for LP gas cylinder must be vented on the level of the cylinder valve and at floor level. The effectiveness of the opening(s) for purposes of ventilation shall be determined with the LP gas supply cylinder in place (see pgs. 19–21).

WARNING: Do not place more than one cylinder in the base cabinet enclosure at any time.

Install the factory-supplied hose and regulator assembly as shown:

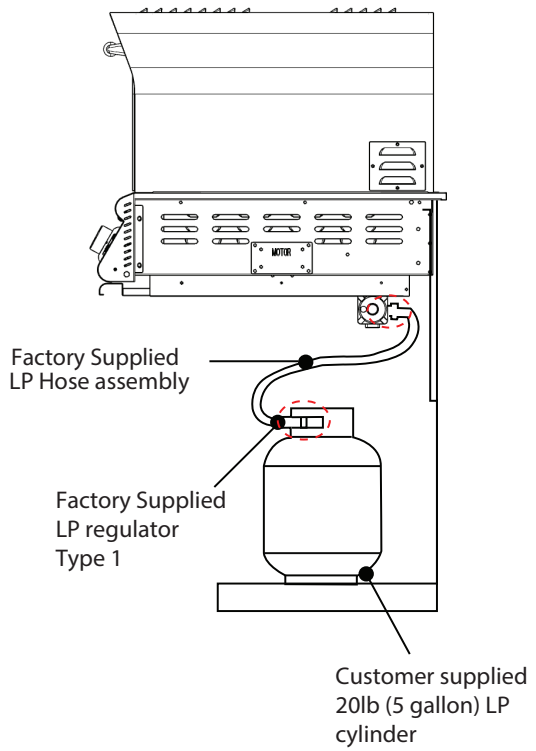

Note: pressure relief valve outlet should not point toward the user when used.

The LP pressure regulator and hose supplied with this unit must be used without alteration.

LP Gas Cylinder Seal Inspection For appliances using a CGA 791 connection:

Inspect the Seal: The cylinder's elastomer face seal may show visible damage or wear over time, which could cause a leak even if the connection is tightened.

Check Before Every Use: Visually inspect the seal every time the LP gas cylinder is replaced or refilled. Return Damaged Cylinders: If you see cracks, pitting, or other signs of deterioration (as shown in Figure 5), return the cylinder unused to the seller.

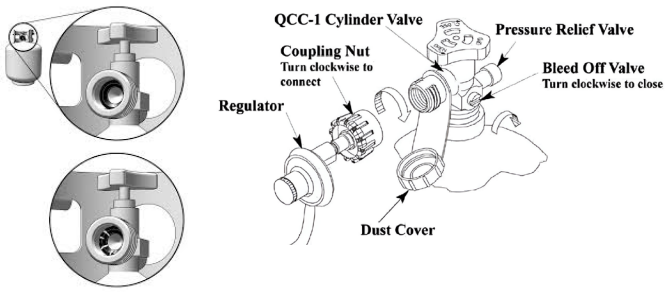

Natural Gas Installation:

The installation must conform with local codes or, in the absence of local codes, with either the National Fuel Gas Code, ANSI Z223.1/NFPA 54, Natural Gas and Propane Installation Code, CSA B149.1 or Propane Storage and Handling Code, B149.2.

- This gas appliance and its individual shutoff valve must be disconnected from the gas supply piping system during any pressure testing of that system at the test pressures in excess of 1/2 psi (3.5 kPa).
- This appliance must be isolated from the gas supply piping system by closing its individual manual shutoff valve during any pressure testing of the gas supply piping system at test pressures equal to or less than 1/2 psi (3.5 kPa).

If the gas appliance is factory built for natural gas:

The regulator supplied is set for '' water column (WC). The regulator is convertible to 11'' wc (2.49 kPa) for plumb-in system LP application. Do not use with a 20 lb. LP cylinder. Make sure that the regulator is set for the correct gas type. To check, remove the brass hex cap. You will find the conversion plastic pin attached to the cap to the underside of the cap. If the disc (1/2''. diameter) of the pin is close to the cap, then the regulator is set for natural gas. If the disc is at the tip of the pin, away from the brass cap, the regulator is set for system LP application. To convert to natural gas, remove the plastic conversion pin and invert and replace it back in a manner such that the disc is close to the brass cap. For both natural gas and LP, the maximum inlet pressure is 14'' wc (3.5 kPa).

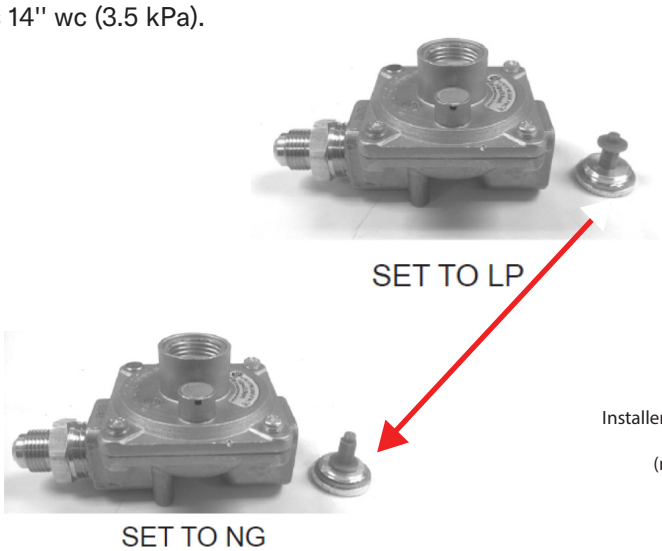

Natural Gas Connection:

- Connect a suitable natural gas flex connector to the appliance regulator located on the rear right corner of the appliance. It is recommended to use a flex connector with a minimum of a 5/8” diameter or larger.
- Seal all non-flared fittings with thread sealant or Teflon tape. Make sure it is rated for gas appliances.
- Ensure the flex connector is protected from sharp edges, heat, aggressive surfaces, and kinking.
- Check the appliance controls to ensure all control valves are in the full OFF position.
- Turn on the main gas supply and check all connections for leaks using soapy water (see pg. 17).
- The regulator used must be set for 4” WC and is for use with Natural gas only.
- **Note:** Most low-pressure regulators have a directional arrow indicating the direction in which the gas must travel. Ensure the arrow is pointing in the direction of the appliance.
- An installer-supplied gas shutoff valve must be installed in an accessible place.

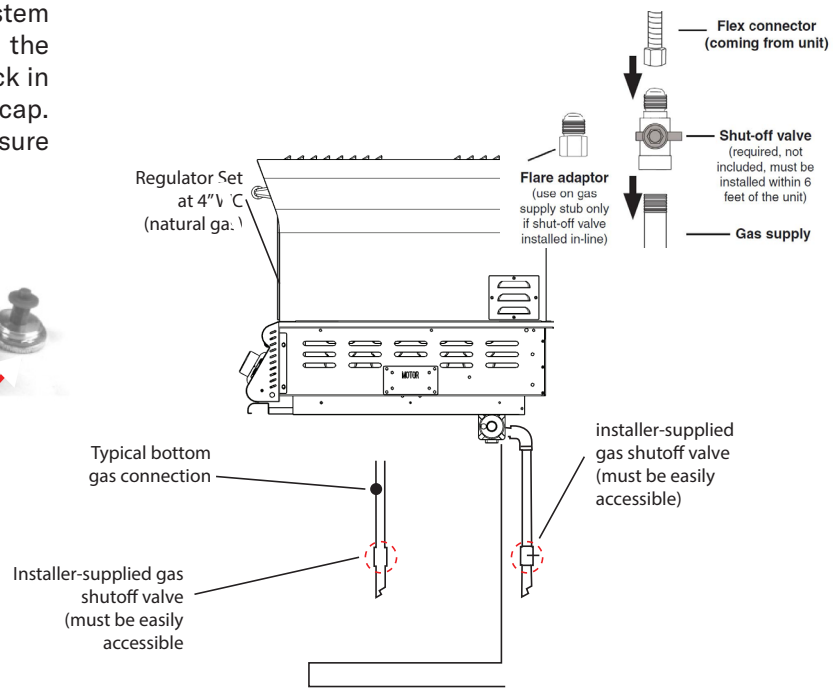

Typical natural gas hook-up
caution: provide adequate ventilation holes in the enclosure for safety purposes in the event of a gas leak

Fuel Conversion

Convertible Gas Regulator (if applicable):

Caution: This should only by performed by a licensed gas professional. There is a tutorial video at blazeGrills.com to supplement the instructions below.

Currently all natural gas appliances are supplied with a regulator which is appropriate for use with natural gas or low-pressure propane.

- When converting to propane gas, the most common propane canister used is a smaller sized portable canister (typically 5 gallons or 20 pounds). The pre-installed regulator will need to be converted to LP gas (see below) and add a secondary low-pressure hose and regulator with an outbound pressure set to approximately 11'' of water column pressure. If an individual is intending on using propane provided from a larger tank permanently installed on location, the regulator included with the appliance will only need to be converted for use with LP fuel (see NG-LP regulator conversion below). Please be aware that this included regulator can only withstand an inbound pressure of .5 PSI or roughly 14'' WC pressure. Any higher pressure on location will have to be further regulated before connecting to the regulator on the appliance. Please consult your local propane gas provider to confirm the gas pressure on the supply line feeding the appliance.

- If converting to natural gas, a low-pressure regulator with an outbound pressure set to 4'' WC pressure must be used.

- With either setup, remember to always check for gas leaks after the job is complete (see csee pg. 17).

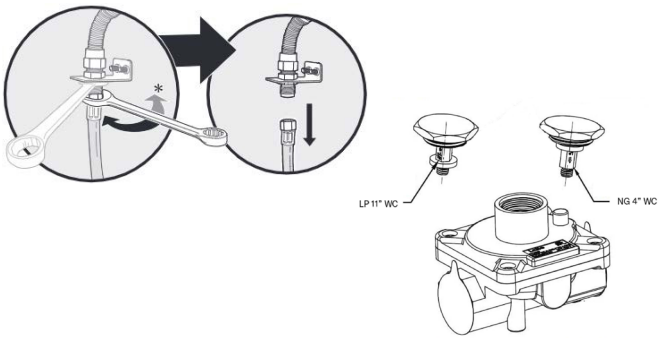

Fuel (Gas) Conversion Instructions for Blaze Gas

⚠ **Caution:** This should only by performed by a licensed gas professional.

Main Burners:

Step 1: Remove appliance grates and stone to expose the main burners in the appliance. (See pg 5)

Step 2: Remove the burners fallowing the steps on pg.5

Step 3: To remove burner, pull burner upwards and slide burner toward the rear of the appliance. Repeat for each burner.

Step 4: Where the burner was previously located, connecting to the main valve through the hole in the basin should now be empty space.

Step 5: Inside the space you will find the end of the valve (toward the front of appliance) with an orifice (brass fitting) screwed into the end of the valve stem.

Step 6: Carefully remove the orifice with a 6mm socket set and extension. (These are extremely fragile! When unscrewing, be extremely gentle, you could easily break the brass fitting and have to replace the valve).

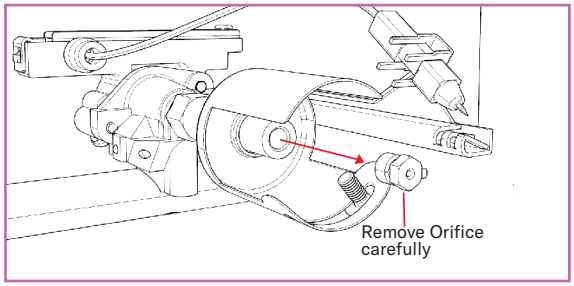

Step 7: Once the old orifice is removed, replace it with the new orifice, and repeat for all burners. When re-installing the orifice, do not over tighten or you will strip the brass fitting. Very little pressure is needed!!!

Step 8: Inspect burners for proper flame appearance. The ideal flame appearance is to be primarily blue. A blue flame indicates that the burner is operating efficiently. and that the gas is burning completely. Yellow or orange flames suggest incomplete combustion.

Rear Burner

Step 1: Remove screws on access panel on the right side.

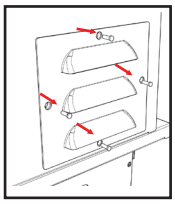

Step 2: Remove screws from bracket then rotate so the brass elbow to expose the orifice.

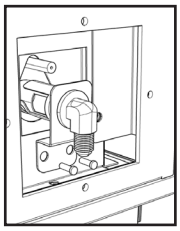

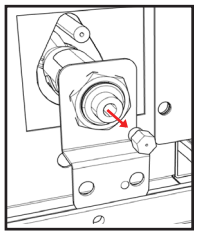

Step 3: Replace your orifice and reassemble your appliance.

Local Codes:

- The self-contained LP system appliance is design certified to be used with a standard 20 lb., 12 1/4" diameter, 18" high cylinder with right handed connection threads and this is the maximum size LP tank to be used. The cylinder must be marked in accordance with the latest U.S. Department of Transportation specifications for LP gas cylinders. (DOT. CFR49 or National Standards of Canada CAN/CSA-B359 Cylinders, Spheres and Tubes for the Transportation of Dangerous Goods) a propane tank with an OPD) Overfill Prevention Device) must be used at all times.

- If there are local codes that apply to outdoor burners, you will have to conform to them. Installation must conform with local codes or, in the absence of local codes, with Propane Installation Code, CSA B149.1, or Propane Storage and Handling Code, B149.2 as applicable.

- Installation in Canada must be in accordance with the standard CAN/CGA- B149.2.

- A licensed gas professional or local gas company representative must perform all gas connections.

- Ensure that the service supplying the appliance is fitted with a shut-off valve conveniently positioned near the appliance and giving ease of access.

- The appliance and its individual shut-off valve must be disconnected from the gas supply piping system during any pressure testing of that system.

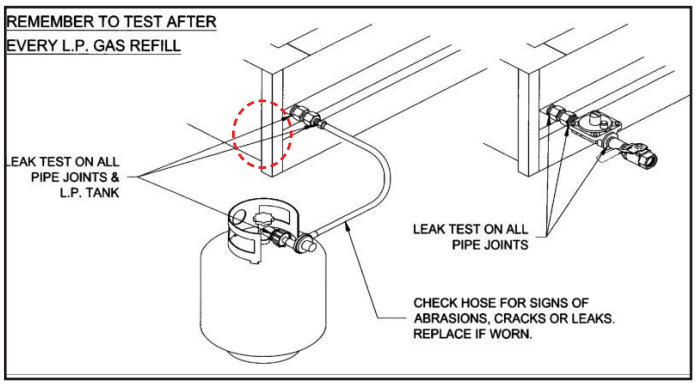

Checking for Gas Leaks:

- Perform a leak test before each use and whenever the gas cylinder is connected to the regulator or whenever any part of the gas system is disconnected or replaced. As a safety precaution, remember to always leak test your appliance outdoors in a well-ventilated area. Never smoke or permit sources of ignition in the area while doing a leak test. **Do not use a flame, such as a lighted match to test for leaks**. Use a solution of soapy water.

- Prepare a leak testing solution of soapy water by mixing in a spray bottle one part liquid soap to one part water.

- Make sure all the control knobs are in the OFF position and then turn on the gas.

- On natural gas systems, turn the main feed valve to the appliance. On LP systems, turn the cylinder valve knob counterclockwise one turn to open.

- Apply the leak-testing solution by spraying it on joints of the gas delivery system. This includes all valves, pipe connections, joints, lines, and every point from the gas source to the burners.

- Blowing bubbles in the soap solution and/or there is a faint gas smell (typically gas has an egg smell) indicates that a leak is present. Do not attempt to ignite the appliance.

- Turn all control knobs back to the full OFF position.

- **All leaks must be corrected immediately:** If you are unable to stop a leak, turn all control knobs back to the full OFF position, shut off the gas supply to the appliance, and release pressure in the hose and manifold by pushing in and turning any of the control valves one quarter turn counterclockwise. On LP systems, remove the cylinder from the appliance. **Call an authorized gas appliance service technician or an LP gas dealer. Do not use the appliance until the leak is corrected.**

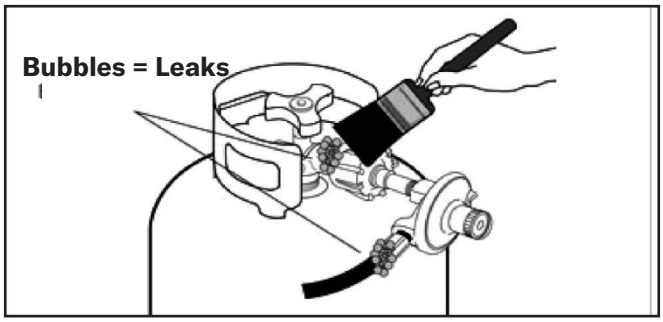

Installing the Appliance in a BBQ Island

Safety Information and Install:

Two person lift: You will need a second person to help you avoid damaging the appliance or your appliance island.

Permit may be required: Check with city and fire department for local building codes. A permit may be required for outdoor kitchen construction.

Non-combustible material warning: Ensure all clearances to combustibles are maintained. The island must be made out of non-combustible material. In the event it is combustible, the use of an insulation jacket is REQUIRED.

Protection from weather: Keep the appliance protected from adverse weather, including rain and wind. Wind, particularly coming into the rear of the appliance, can affect the exhaust from escaping the appliance. This can back up the heat behind the control panel potentially creating a gas leak, damage to the product, and injury. A wind block behind the appliance may be necessary.

Install Instructions:

Before installing an appliance in any island cutout, make sure that the opening is not bigger than the outside frame of the appliance unit. The appliance should rest on the lip of the frame. Pay careful attention to the location of the gas line. It should be routed away from sources of heat, sharp edges, and aggressive surfaces and should make as few bends as possible. Ensure the gas line connection will be accessible when appliance is installed. A safety shut-off valve is required at this gas connection point. Before installing the appliance into the island cut-out, the main burner cotter pins may be removed for convenience of service adjustments, and maintenance in the future. These are accessible from the outside rear of the appliance. Ventilation openings in side walls shall not communicate directly with other enclosures of the outdoor cooking gas appliance. If the outdoor kitchen countertop will overhang the face of the island, notching out the two front countertop edges will be necessary to allow the appliance to slide flush against the outer front wall to the outdoor kitchen. Due to differing personal preferences the size of the notch-out, is recommended to be done at the point of installation so that the consumer can dictate their preference. Ensure your island cavity is adequately vented. Number of vents shown in diagram is for **informational purposes only**. Consult your local licensed professional for adequate requirements. Ensure your outdoor kitchen is constructed out of non-combustible materials.

If your outdoor kitchen is constructed of combustible materials, a Blaze insulated jacket is REQUIRED.

If bbq island is not manufactured from "non-combustible" material you must use a Blaze insulated jacket for your appliance.

Install Steps:

Step 1: Slide the appliance into the cut-out and then attach the gas line.

Step 2: Be very careful not to kink the gas line when lowering the appliance into the cut-out.

Step 3: Keep your fingers away from where the appliance will be supported on counter. Your fingers could become trapped and serious injury could occur.

Step 4: Check to make sure the appliance is level and is supported around the entire outside edge. If the appliance is not level or is unstable, use non-combustible shims under the outside lip to stabilize it.

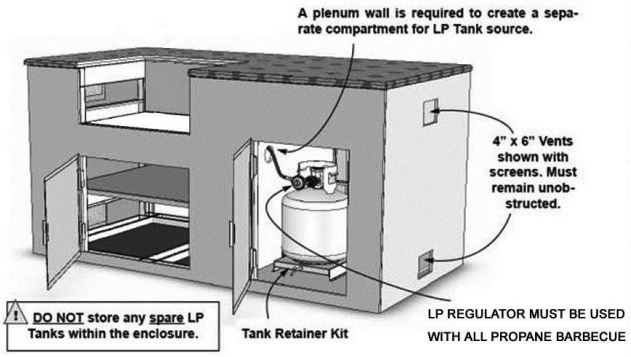

Outdoor Kitchen Ventilation

Failure to adequately vent your outdoor kitchen cavity could result in an explosion or fire:

When building a gas appliance into an outdoor kitchen, it is necessary to provide adequate ventilation for the island cavity underneath. This is necessary for not only proper combustion, but also to prevent a build-up of gas. While the amount of venting required for your island will vary due to the variety of differing local codes, inner framework and design of an outdoor kitchen, the amount of gas products installed and their locations, etc., all built-in applications/ islands should be ventilated in some way. Your local contractor and/or your local code authority can determine adequate ventilation for each installation. Stainless steel vent panels are available from your dealer to cover the island venting. A Blaze insulating jacket can be found through your local Blaze dealer.

The diagram below shows a variety of examples of venting locations and configurations for an outdoor kitchen. These are not the only possible options for venting but instead simply some examples of the more common configurations found. Notice the middle set of vents being positioned lower on the island cavity for LP gas. Lower vents are for LP and the higher vents are for natural gas (examples only).

NG/natural gas: Natural gas is lighter than air and will rise to the highest levels of the outdoor kitchen.

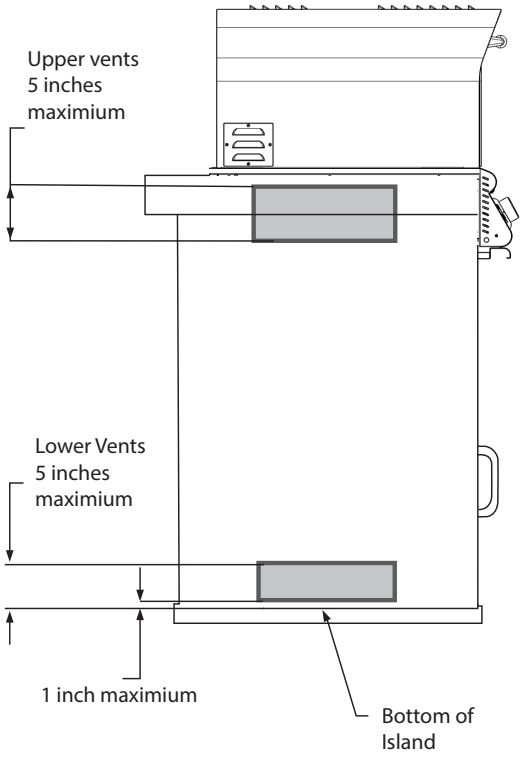

The following information is important to consider:

- Must use non-combustible construction or installed with an **insulated jacket.**
- Should NOT be located under any overhead combustible construction.
- Upper and lower vents must be provided for combustion air on both sides of island.
- Vents must remain unobstructed.
- Upper vents must be located 5 inches from the top of the island to the bottom of the vent.
- Lower vents must be located within 1 inch from the bottom of the island to the bottom of the first vent opening and no more than 5 inches from the bottom of the island to the top of the vent.
- Vents must meet ANSI standard codes.
- Upper vents must have openings that have a total free area of not less than 1 sq. in. per lb of stored fuel capacity per vent and the lower vents must have opening that have a total free area of not less than 1/2 sq in per lb. of stored fuel capacity per vents.
- Vent opening must have minimum dimensions to permit the entrance of a 1/8'' diameter rod.

LP/propane gas: LP gas is heavier than air and will settle to the lowest levels of the outdoor kitchen.

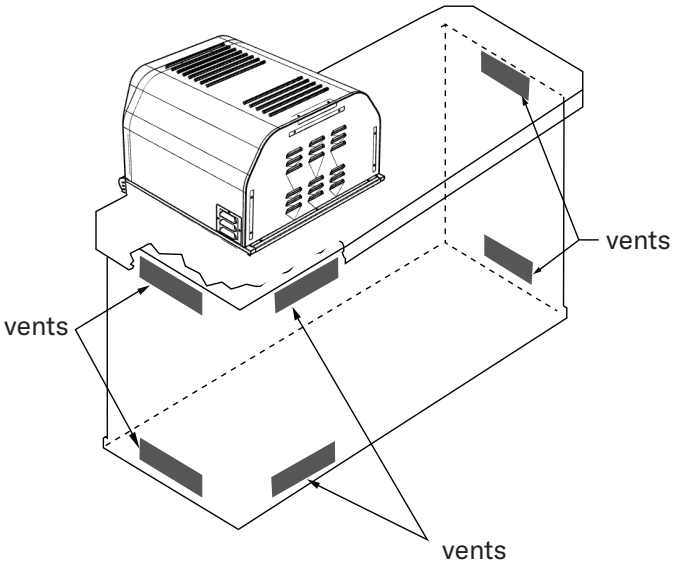

First-Time Operation

Warning: Before lighting the burners inspect the gas supply piping or hose. If there is evidence of cuts, wear, or abrasion, it must be replaced prior to use. Always keep your face and body as far away from the appliance as possible when lighting. Always perfrom a gas leak test before each use.

Caution: Never operate the appliance unattended. The surface is extremely hot and someone could touch the hot surface and get seriously burned. All gas appliances should be attended at all times.

Prior to using your appliance, verify that all of the following is correct:

- The burner tube is free of any debris or obstruction.
- Installation of the proper gas type and regulator settings.
- The proper gas connection is complete.
- Check for gas leaks.
- Minimum clearances are maintained.
- All packaging has been removed.
- All parts and components are properly in place.
- An installer-supplied manual gas shut-off valve is fully accessible.
- LP hose is clean and inspected for cuts, wear, abrasion, or leaks. Replace if necessary, with a suitable UL, ETL or CSA Listed part with internally threaded connector.

Powering the Appliance and Using Digital Screen:

Step 1: Make sure unit is plugged into a 15-AMP breaker with GFI protection. An extension cord may be used if all requirements from pg. 12 are met.

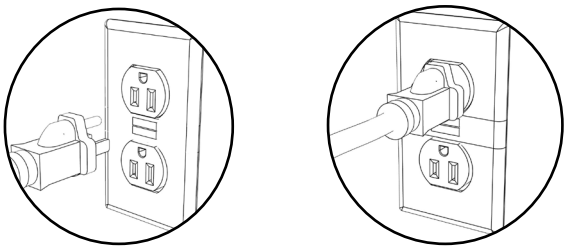

Step 2: Press the button to the right lower side wall of the control panel to power up. Button will turn "red" when the main power is on. This will power the digital screen and LED knobs (see below image).

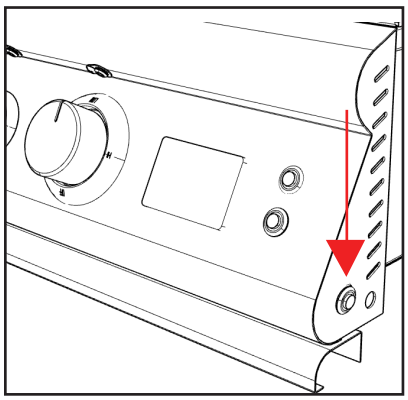

Step 3: Using the digital screen. The digital screen is used for accurate monitoring of the appliance's cooking temperature and for monitoring probe temperature. In addition, your Blaze appliance is equipped with two meat probes, for monitoring those tasty steaks (connections are located next the power button). The right side of the screen is used for monitoring your meat probe temperatures.

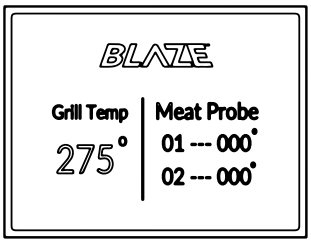

Lighting the Appliance:

Step 1: Open the appliance.

Step 2: Use caution when lighting burners by standing as far away from the burners as possible. Do not put your hands, arms, head, or any body parts close to the oven when lighting.

Step 3: To ignite burners, push the burner knob in and slowly rotate counterclockwise to the high position. Gas will only be released when pushed in to start.

Step 4: You will hear a loud click as the electronic lighter produces a spark. Listen for the sound of the gas igniting and look for a flame beneath the cooking grate. If the burner does not light on the first try, repeat immediately.

Step 5: If the burner does not light in five seconds, turn the burners off and wait five minutes with the appliance open until the gas clears before attempting to light it again. Repeat the procedure or try the manual lighting procedure below.

Step 6: If the burner does not light after several attempts, immediately close all gas valves and consult the next section manually lighting the main burners.

Step 7: Upon successful lighting, repeat the process on the other burners you wish to light.

Step 8: To shut off the burners, rotate the knob and turn to OFF. It is normal to hear a popping sound when the burners are turned off.

Step 9: Close the valve at the gas supply.

Manual Burner Lighting:

Warning: A long match can be used, but it is recommended to use a long lighter to perform match-lighting procedures. Serious burns can occur and lighters can explode.

Step 1: Open the appliance.

Step 2: If you have just attempted to light the burner, allow five minutes for any accumulated gas to dissipate. Use caution by standing as far away from the burners as possible. Do not put your hands, arms, head or any body parts close to the oven when lighting.

Step 3: Hold your open flame to the top of the tube burners.

Step 4: Push in and turn the control knob to HIGH.

Step 5: If the burner does not light after five seconds, turn the control knobs to the OFF position.

Step 6: Wait five minutes until the gas clears before attempting to light it again.

Flame Adjustment:

Become familiar with the safety instructions at the front of this manual. Do not smoke while lighting the appliance or checking the gas supply connections.

- Make sure that all gas connections are securely tightened and have been leak-tested with a soapy water solution - never with a flame!
- Light the main burners and run them on the high setting.
- Inspect burners for proper flame appearance. The ideal flame appearance is one that is mostly blue and not lifting off of the burner surface. There is an air shutter found at the end of the burner (close to the valve) which can be either opened or closed to make adjustments to the flame's appearance. To adjust, remove the burner from the appliance and loosen the Phillips head screw holding the air shutter to the burner. If the flame is yellow, open the air shutter to make the flame bluer. If the flame is lifting off of the burner surface, slightly close the air shutter. Re-tighten the Phillips head screw and re-install the burner to recheck the flame appearance. Repeat if necessary.
- Turn burners to low flame setting and test for proper flame height. Flame should be stable and burning out of each burner port without danger of going out in the lowest setting. (To adjust the LOW flame setting simply light the appliance on the LOW setting and adjust the screw located under the knob on the front of the valve using a flat head screwdriver as seen in the diagram below.)

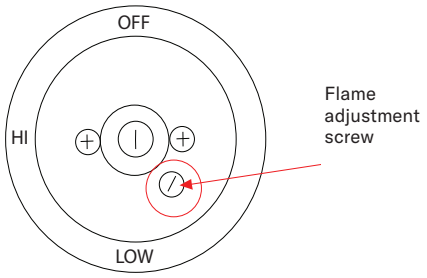

How-to Guide:
Our Most Important Tips:

Preheating the Oven:
Always preheat your Blaze Outdoor Oven before cooking. Preheating allows the ceramic stone and oven cavity to reach an even, stable temperature for consistent results.

For pizza or high-temperature baking, preheat the oven for 10–15 minutes with the door closed until the stone reaches your desired cooking temperature (typically 500–700 °F).

For roasting or lower-temperature baking, preheat for 5–10 minutes to stabilize the chamber temperature. Preheating also helps burn off any residue from prior use and reduces sticking on the stone or racks.

Using the Oven:

Prepare the stone or rack: Lightly dust the pizza stone with flour or cornmeal before placing dough, or line the cooking rack with a suitable oven-safe pan or tray for roasting.

Loading food: Use a pizza peel or oven-safe tongs to place food inside the oven. Avoid dropping cold or wet items directly onto a hot stone, as this can cause cracking.

Monitor temperature: Use the built-in digital display or a food thermometer to check both internal oven temperature and meat probe readings. Adjust burner settings as needed to maintain target heat.

Cooking and rotating: For pizzas, allow the rotating stone to turn automatically for even cooking. For roasting or baking, rotate trays halfway through cook time for uniform browning.

Removing food: Use heat-resistant gloves or tools to remove items carefully. Always open the oven door slowly to release heat safely.

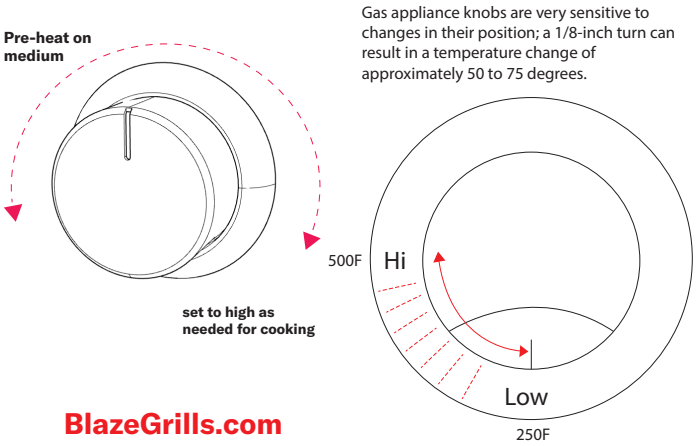

Exterior Cleaning:

Before covering your appliance* Wipe down the exterior of the appliance to remove any splatter or grease, always scrubbing and polishing in the direction of the stainless-steel grain to avoid scratching the material. Do not use harsh abrasives — instead, use a stainless steel cleaner to treat the exterior surface for a polished look. To remove baked-on foods, use a fine-to-medium-grit, non-metallic abrasive pad with a stainless-steel cleaner to avoid specks of grease collecting in the grain (which will cause the appearance of rust). Vinyl covers are the best way to protect appliances from the elements. They can be purchased through your local dealer or at Blazegrill.com

- **Always allow the surface to dry.**
- **Do NOT cover a damp or still-warm appliance.**

Cleaning the exterior of a stainless steel appliance is important to maintain its appearance and prevent rust and other damage. Here's a step-by-step guide to effectively clean your stainless steel appliance:

What's needed:
- Mild dish soap
- Warm water
- Soft cloths or sponges
- Stainless steel cleaner or polish
- Baking soda
- White vinegar (optional)
- Microfiber cloth

Steps to Clean the Exterior of a Stainless Steel Appliance:

Prepare cleaning solution: Mix a few drops of mild dish soap with warm water in a bucket or container.

Wipe down the appliance: Dip a soft cloth or sponge into the soapy water and wring it out. Wipe down the exterior surfaces of the appliance, including the lid, sides, and any other accessible parts. Make sure to follow the grain of the stainless steel to avoid scratches.

Rinse: Rinse the cloth or sponge with clean water and wipe down the appliance to remove any soap residue. Ensure all soap is removed, as it can leave streaks or

Dry the appliance: Use a clean, dry microfiber cloth to dry the appliance thoroughly. This helps to prevent water spots and streaks.

Tough stains and grease: For tougher stains or grease, uses sponge with Bar Keeper's Friend. following the grain of the stainless steel. Rinse with clean water and dry with a microfiber cloth.

Alternatively, you can use a mixture of equal parts white vinegar and water to clean stubborn spots. Spray the solution onto the stains, let it sit for a few minutes, then wipe clean with a cloth.

Polish (optional): If you want to add extra shine to your appliance you can use a stainless steel cleaner or polish. Apply according to the manufacturer's instructions, usually by spraying or applying a small amount

Caution: Never flood a hot appliance with cold water! This causes appliance warping and can cause the appliance grate to crack. Always wait until the appliance is completely cool before cleaning. After every use and when cool, you can thoroughly wipe the grate with the grain using a rough cloth to remove food particles and other cooking residue.

You may use a mixed solution of water and vinegar (2 tablespoons of vinegar per half gallon) and a Scotch-Brite pad (working in the same direction as the stainless steel grain) to remove the cooked-in food. Special appliance cleaners may also be commercially available in your area which may be used to remove heavy soil build-up. Thoroughly rinse the appliance with room temperature water after using any of these cleaners.

Dry the appliance grate and coat it lightly with the cooking oil of choice or apply a non-stick cooking spray. This will prevent the appliance from getting surface rust.

Cleaning Your Appliance:

This appliance should be cleaned after every use.

1. Appliance burners set to med/high: Scrape appliance with a appliance brush.

2. Mix 50% vinegar/50% water and use a sponge or paper towels to wipe down appliance grates with the solution.

3. Wet a cotton disposable rag with water, and pass on the appliance using tongs, be careful not to let the steam burn you. Rag will steam and absorb any loose remaining particles.

4. Lastly, turn burners off...and place 2-3 tablespoons of peanut, vegetable, avocado, grapeseed or extra virgin olive oil onto a disposable rag and spread with a folded up paper towel until all exposed surface is covered with oil. The lingering heat from the appliance cause help the oil to hit a thinner viscosity. Take another folder paper towel and with your tongs, wipe access oil off the appliance grates.

Drip Tray Cleaning:

After each use, it's crucial to clean the drip tray promptly. Neglecting this step could lead to a potential fire hazard. Once the appliance has cooled down completely, take out the tray from the front of the appliance and wash it using hot, soapy water. When placing the dried drip tray back, ensure it fits securely into the appliance housing. If you opt for an oven-cleaning product, carefully adhere to the manufacturer's guidelines to prevent any damage to the stainl

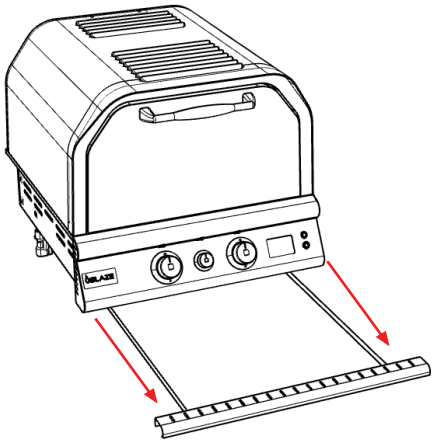

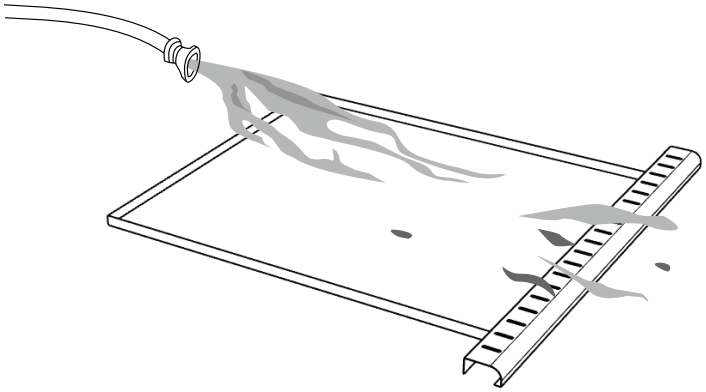

Pizza Stone Turntable and Rotissere Instructions

NOTE: Pizza stone is located in the cardboard sleeve inside the oven. Carefully remove stone from protective box and insert into center round rack in oven.

Place stone into metal rack. Always preheat the entire appliance before cooking. If the appliance is already hot from cooking, you should still preheat the rear burner for 10-15 minutes with door closed. For a proper pizza it's critical for the stone to reach 600 - 700 degrees

Rotisserie instructions:

Insert the rotisserie fork into the base and secure it to the pan. The main rotisserie rod plugs into the center of the drip tray. Slide the prongs onto the shaft so that they face each other, then lock them firmly in place.

Place the basting pan directly on top of the cooking stone — this pan will collect drippings for basting or making gravy. Be sure to clean it thoroughly after each use.

When cooking rotisserie-style, start with the lower burners set to low and adjust the heat as needed. Use the rear burner as necessary to achieve even browning. The rotisserie motor is designed to turn up to a 20 lb (9 kg) cut of meat or poultry.

If the rotisserie shaft doesn't rotate smoothly or the motor sounds strained, the food is likely unbalanced. Use the provided counterweight to correct any unevenness and ensure smooth, consistent rotation.

Rotisserie Cooking

This oven is designed to perform rotisserie cooking with ease. The rear burner's position allows a basting pan to be placed directly beneath the food, collecting drippings for basting or gravy. To enhance flavor, you may add herbs, onions, garlic, or spices to the pan. For hams, consider adding pineapple slices and brown sugar for a rich glaze.

The rotisserie motor is capable of turning up to a 20 lb (9 kg) cut of meat or poultry.

Preparing the Rotisserie

Remove the prong closest to the motor end of the rotisserie shaft.

Skewer the meat onto the shaft, centering it and ensuring it is as evenly balanced as possible.

Insert the first prong into the meat firmly enough to hold it in place, with the heavier side facing downward.

Attach the second prong on the opposite side, push it into the meat, and tighten both securing screws to lock the meat in position.

Check that all loose parts of the meat are secured to prevent tangling as the shaft rotates.

Balancing the Meat

If the rotisserie does not rotate smoothly or the motor sounds strained, the meat is likely unbalanced.

Remove the rotisserie from the oven while keeping the meat attached to the lower prong.

Hold one end of the shaft and adjust the meat until it can rotate freely.

The heaviest section should rest at the bottom.

Once balanced, return the rotisserie to the oven and switch the motor on to confirm smooth rotation. Repeat the adjustment if necessary. Perfectly round and centered cuts typically require little or no balancing.

During Cooking

As the meat cooks, it may shift slightly during the first 10–20 minutes, which can cause it to loosen from the forks. Check the setup periodically during this time and re-secure the forks if needed.

WARNING: When using the rotisserie burner, do not use the oven's bottom burners simultaneously. Doing so may cause the oven to overheat. For best results, use either the rear or bottom burners, not both.

Blaze Wireless Meat Probe

First-Time Operation

WARNING

Do not store the meat probe case inside the grill.

HOT SURFACE: The probe becomes extremely hot during use. Do not touch the metal probe or ceramic head until completely cooled

BURN RISK: Always wear heat-resistant gloves when inserting or removing the probe from meat or the grill.

FIRE RISK: Do not place the charging base near open flames, burners, or extremely hot surfaces.

Insert the probe until it reaches the safety line. Failure to insert the probe to at least this depth may damage the probe.

DO NOT submerge or wash the ceramic charging head—wipe only.

DO NOT charge immediately after use—allow the probe to cool fully before placing it in the charging base.

DO NOT place the ceramic head directly over burner flames or heating elements.

WARNING: The probe must be inserted at least to the safety line. The temperature-sensing tip is only designed to withstand temperatures up to 221°F (105°C). If the probe is not inserted deep enough, the exposed portion may exceed this temperature and become permanently damaged.

WARNING: Do not place the probe in the appliance without inserting it into food. The exposed probe can exceed its maximum temperature rating of 221°F (105°C) and may become permanently damaged.

Do not cover probe with foil.

Blaze Wireless Meat Probe

This appliance comes with wireless meat probes.

These probes provide an approximate temperature, not an exact measurement.

How to Connect Your Blaze Wireless Meat Probes First Time uses

charge your device fully

Step 1: Turn on the appliance.
The thermometer will automatically search for nearby Bluetooth probes for 1 minute.

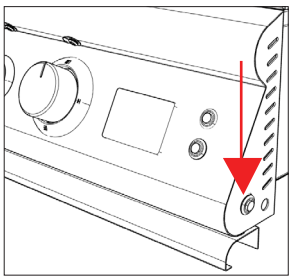

Step 2: Disconnect the fully charged probe from the charger and place it within 1.5 meters (about 5 ft) in front of the appliance screen.

Step 3: When the thermometer detects the probe, the Bluetooth icon blinks slowly (pairing mode).

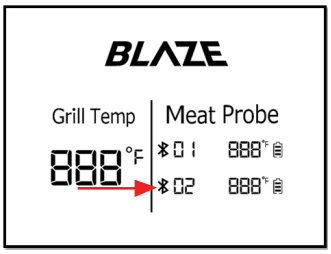

When pairing succeeds, the Bluetooth icon blinks rapidly (connecting).

Once the connection is complete, the Bluetooth icon stays solid.

Trouble Parring?

If pairing does not occur within 1 minute, the thermometer enters standby and the Bluetooth icon stops blinking.

You may reconnect using either option below:

Method 1 Restart the Appliance

Power off the appliance, restart it, and repeat the connection steps above.

Method 2 Reset the Probes

Place the probes in the charging base and connect the base to power.
After the charging indicator lights up, wait 1 minute, then repeat the connection steps.

How to Use Your Blaze Wireless Meat Probes

Step 1: Make sure the Bluetooth probe is fully charged and connected to the appliance. Remove your meat probes from their case and power on your grill.

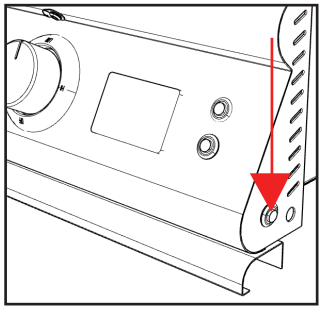

Step 2: Insert the probe into the thickest part of the food, avoiding bones or large pockets of fat.
The probe must be inserted at least to the safety line. If it is not inserted deep enough, the probe may be exposed to temperatures above 221°F (105°C) and can be permanently damaged.

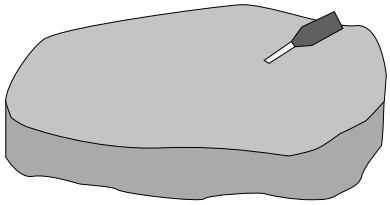

Step 3: Place the food (with the probe inserted) into the appliance.

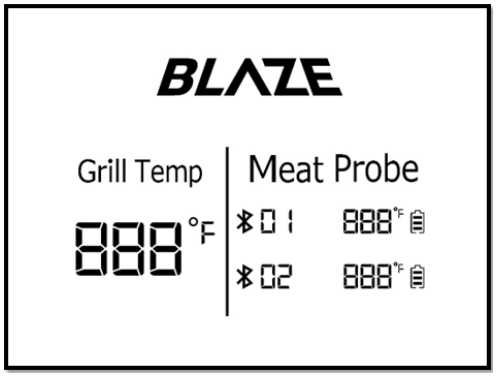

Do not place the probe in the appliance without inserting it into food

Step 4: Use the appliance screen to monitor the internal temperature of the food and the probe's battery level during cooking.

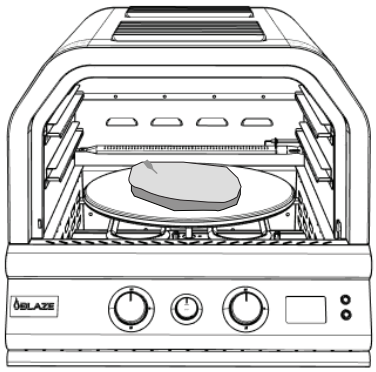

Tip: Each meat probe is labeled "1" and "2," allowing you to monitor different areas of the same cut of meat or multiple foods at the same time.

Step 5:
When cooking is complete, use heat-resistant gloves to remove the food from the appliance and carefully pull out the probe. Allow the probe to cool before cleaning and charging.

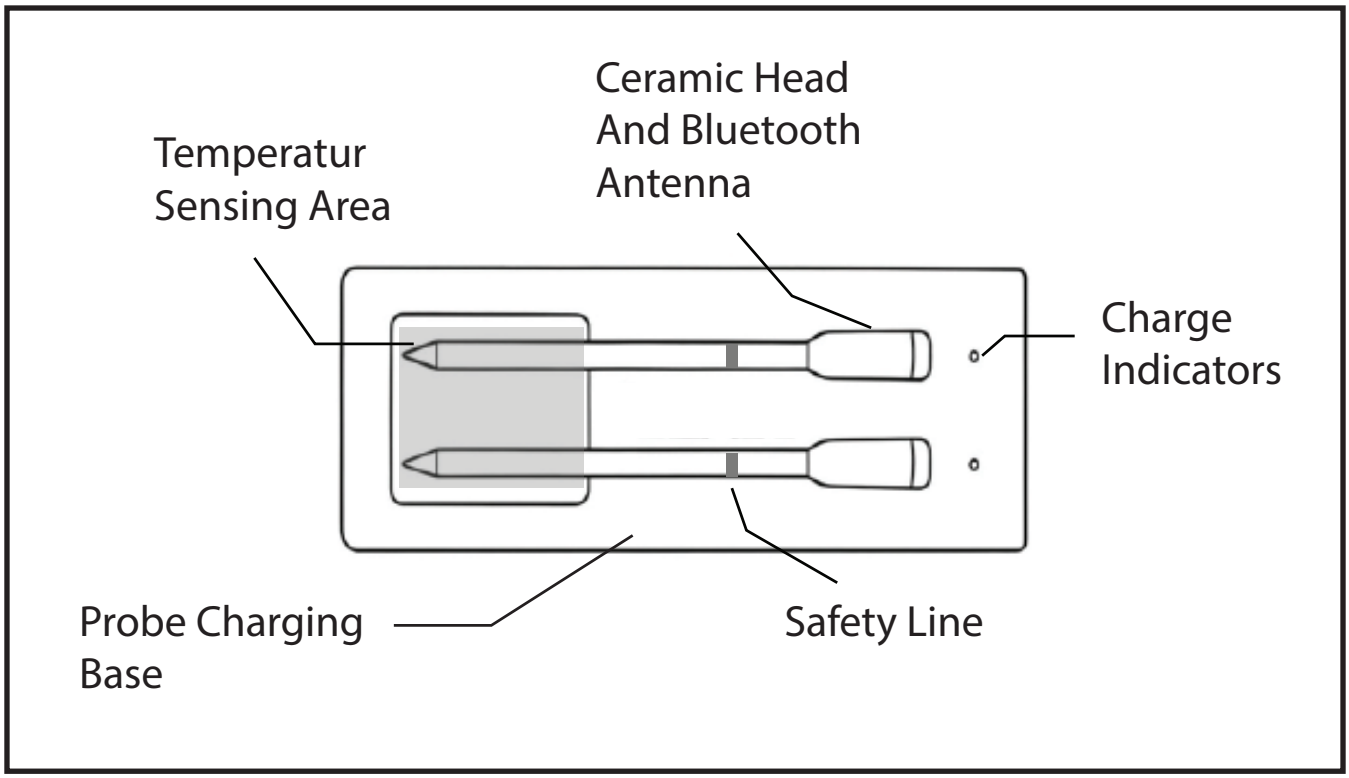

Features

Probe Waterproof Rating: IP68

Bluetooth devices can be 10 meters apart in an unobstructed environment.

Charging Time: 20 minutes (**Be Sure to fully charge your probes before uses**)

Battery Life: 36 hours

⚠ The ceramic head and Bluetooth antenna should not be exposed to temperatures higher than 572°F (300°C).

⚠ Temperature Detection Range: -4°F – 221°F (-20°C – 105°C)

⚠ The thermometer will alarm for 1 minute when the temperature exceeds 221°F (105°C). Exposing the probe to temperatures above this limit will permanently damage the probe.

Warranty

The warranty is valid only for the original owner at the original delivery site and is non-transferable. Retain your sales slip or invoice. Blaze appliances are warrantied for single-family/residential use only. It does not cover labor, labor-related charges, or shipping & handling costs. Repairs must be done by a qualified professional (Blaze will not reimburse for diagnostic charges). Contact our customer service at 1-866-976-9510 for assistance before calling a service provider.

Installation, repair and maintenance work should be performed by an authorized service technician. Work by unqualified persons could be dangerous and will void the warranty. All Natural and LP Gas appliances must have a qualified installer complete the installation for the warranty to be in effect. The incorrect installation of the Blaze gas appliance will void the warranty. Please call Blaze for more information on correct installation of the gas appliance.

Blaze shall not be liable under this or any implied warranty for incidental or consequential damages, and Blaze's liability is limited to the purchase price of the appliance only. This warranty gives you specific legal rights, and you may also have other rights, which may vary from state to state. This warranty is applicable in the United States and Canada only.

Improper maintenance, high cooking temperatures, excessive humidity, chlorine, fertilizers, lawn pesticides, chemicals, and salt can affect the Stainless Steel components and for these reasons, the warranties DO NOT COVER DISCOLORATION, SURFACE RUST, OR RUST, unless there is a loss of structural integrity/rust through of the appliance components. This warranty covers defects in material and workmanship.

Warranty Service & Replacement Parts: To obtain warranty service or replacement parts, contact your authorized selling dealer or Blaze Appliances directly. Be prepared to provide the following information: the purchaser's name, model number and serial number of the appliance, date of purchase, and a detailed description of the problem. Blaze Appliances will not cover service calls for correcting or installing problems. The owner is responsible for proper installation, normal care and maintenance, providing proof of purchase upon request, and making the appliance accessible for service. In the event of a warranty replacement, all costs associated with removal, replacement, installation, and shipping are the responsibility of the appliance owner. Some states do not allow limitations on the duration of implied warranties or the exclusion or limitation of consequential damages. This warranty provides specific legal rights, and you may have other rights that vary from state to state.

Warranty on Parts:

Stainless Steel Components: Blaze offers a lifetime warranty on the stainless steel components, which include the cooking grids, housing, and burners. Lifetime Flame Stabilizers: Coverage is provided for flame stabilizers as well stabilizers as well.

- Main Burners - Lifetime (Parts Only)
- Appliance Grates - Lifetime (Parts Only)
- Body - Lifetime (Parts Only)
- Valves - Lifetime (Parts Only)

Multi-user warranty

- Ignition - 1 Year (Parts Only)
- Lighting and Electrical - 1 year (Parts

Blaze Gas appliances can be used in multi-user applications, including but not limited to: apartment complexes, hotels, condo complexes, fire stations, police stations, multi-family dwellings, etc. The Blaze Gas appliance warranty is not applicable when used in a restaurant setting. For multi-user applications Blaze Outdoor Products applies the following warranty:

THREE (3) YEAR WARRANTY Stainless steel housing, burners, stainless steel rod cooking grids, brass valves, inner liners and manifold assemblies.

NINETY (90) DAY WARRANTY All other components, except burners, are warrantied for 90 days. This warranty replaces the lifetime warranty offered with residential use when appliance is used in multi-user settings.

If you have purchased a Blaze appliance you must register your product within 30 days of purchase to validate the warranty and maintain your original receipt to get parts for the appliance. You may register your appliance at www.blazegrills.com by selecting Support, and then selecting Register your Product. You may also fill out page 3 and mail to the address located at the bottom of the form. The warranty is for original owners only at the original site of delivery and cannot be transferred to new owners. You must retain your sales slip or invoice.

Frequently Asked Questions:

Q: Where can I register my Blaze Outdoor Oven?
You can register your Blaze Outdoor Oven at blazegrills.com/support/register-your-product/
.

Q: Can I still register my oven if it has been over 30 days?
Yes! You can still register your Blaze Outdoor Oven even after 30 days. Be sure to keep a copy of your purchase receipt or record your original purchase date for any future warranty claims.

Q: Where can I find replacement parts that are not covered under my warranty?
Replacement and non-warranty parts for your Blaze Outdoor Oven can be found at blazegrill.com/where-to-buy/
.

Q: What should I do if the flame appears irregular or the oven is not heating properly?
Immediately turn off the gas supply and allow the oven to cool. Remove the cooking stone and burner cover, then check the burner ports for any debris or obstructions. Clean the burner assembly and orifices, and verify that your gas pressure is within specification.

Q: Why is my oven not reaching the desired temperature?
Ensure the gas hose is not kinked or obstructed, verify gas pressure, and clean the burner orifices. Also, make sure the air intake openings are clear and the oven is preheating with the door closed.

Q: Why does my flame go out when set to low?
Strong wind or improper ventilation can cause the flame to go out on low settings. Try repositioning the oven or using a Blaze wind guard if in a windy area. If the issue continues, refer to the troubleshooting section on page 21 of your manual.

Please leave these instructions with the consumer.

Please read and retain these instructions for future reference and before installation or operation.

Contact Us:

Blaze

3401 Oak Villa Blvd. Baton Rouge, LA 70814

Phone: 866-976-9510

customerservice@blazegrills.com

Contact Us:

@BlazeGrills

@Blaze_Grills

@BlazeOutdoorProducts