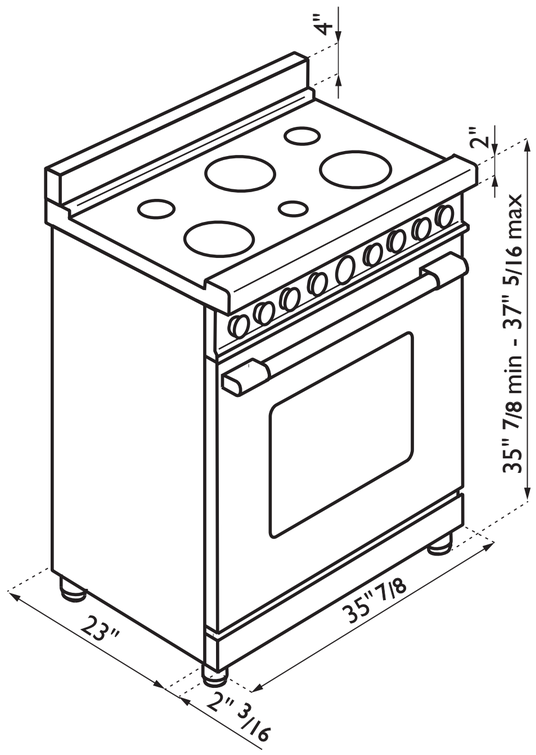
4"
2"
35" 7/8 min - 37" 5/16 max
35"7/8
23"
2" 3/16

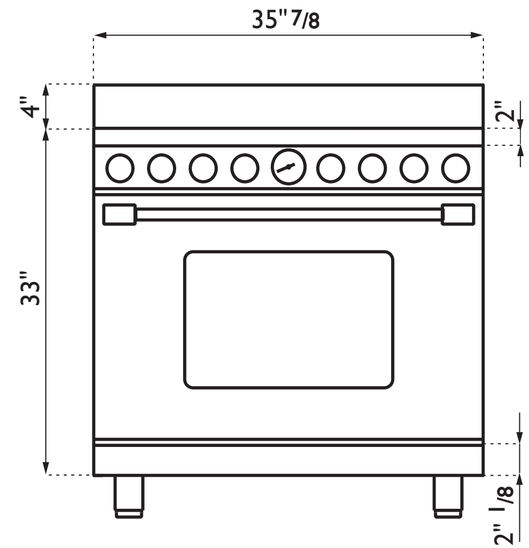
35"7/8
4"
2"
33"
2" 1/8

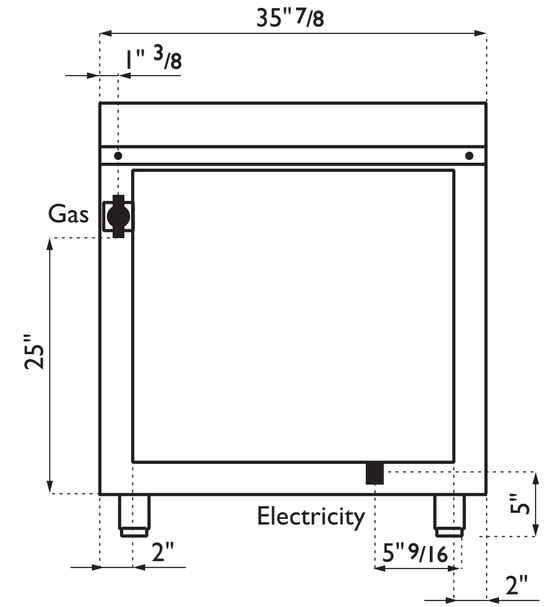
35"7/8
1" 3/8
Gas
25"
Electricity
5"
2"
5"9/16
2"

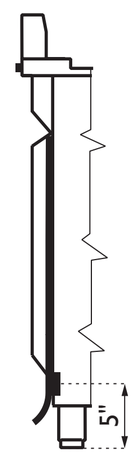
5"

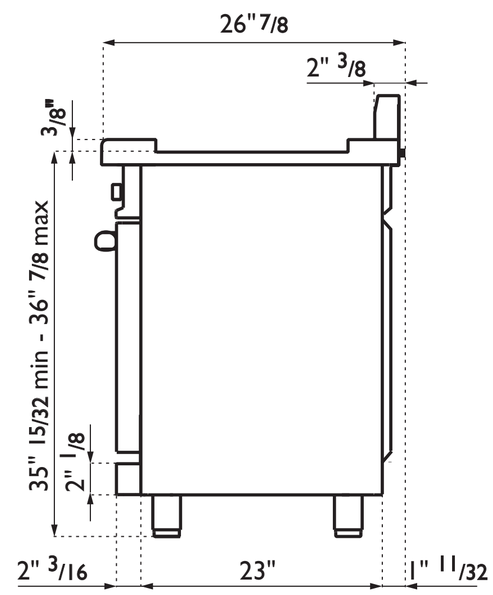
26"7/8
2" 3/8
3/8"
35" 15/32 min - 36" 7/8 max
2" 1/8
2" 3/16
23"
1" 11/32

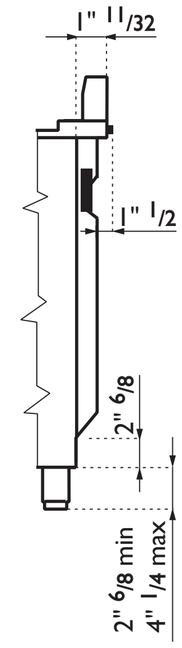
1" 11/32
1" 1/2
2" 6/8
2" 6/8 min
4" 1/4 max

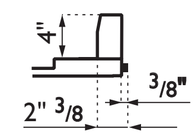
4"
3/8"
2" 3/8