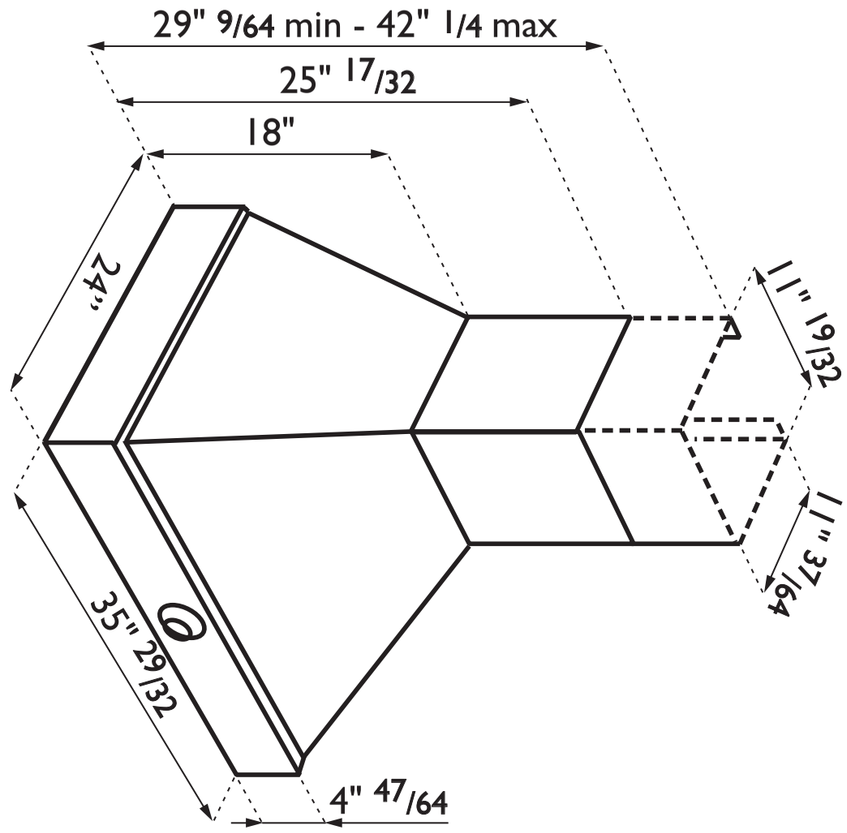
29" 9/64 min - 42" 1/4 max
25" 17/32
18"
24"
11" 19/32
11" 37/64
35" 29/32
4" 47/64

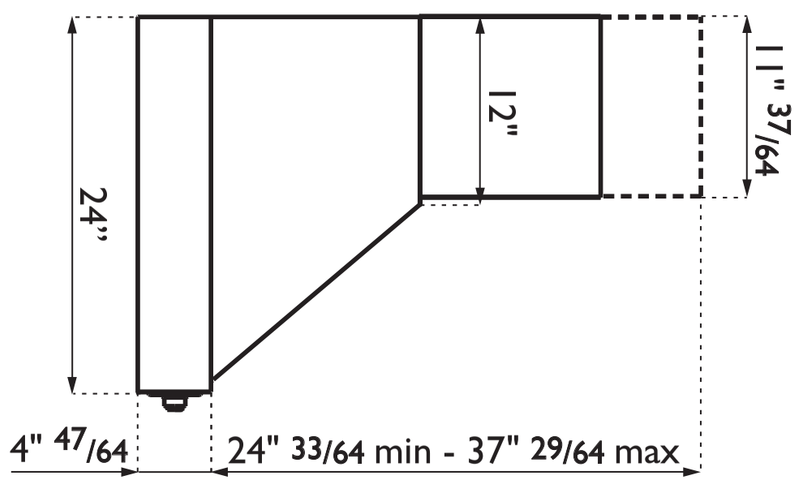
24"
12"
11" 37/64
4" 47/64
24" 33/64 min - 37" 29/64 max